OPERATION AND INSTALLATION

SOLAR CONTROLLER

» SOM 7 PLUS

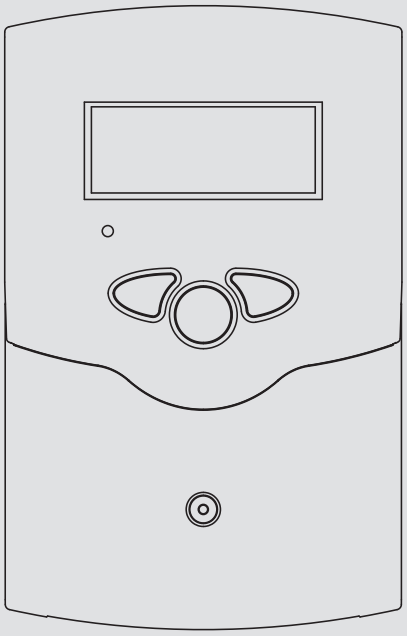

STIEBEL ELTRON

Contents

General

Safety advice:

Please read the following information carefully before installing and operating the controller. In this way damage to the solar system caused by wrong installation will be avoided. Please make sure that the mounting is adapted to the characteristics of the building, that the local regulations are respected and is conform with the technical rules.

Please pay attention to the following safety advice in order to avoid danger and damage to people and property.

Subject to technical change. Errors excepted.

Instructions:

Attention should be paid to

- **valid national and local standards and regulations**
- **respective valid standards and directives**

Equipment to be installed and used in accordance with the rules of the National Electrical Code (NEC) or with Canadian Electrical Code (CEC), Part I.

These instructions are exclusively addressed to authorized skilled personnel.

- **Only qualified electricians should carry out installation and maintenance work.**
- **Initial installation should be carried out by qualified personnel**

Description of symbols

WARNING!	Warnings are indicated with a warning triangle! They contain information on how to avoid the danger described.
	

Signal words describe the danger that may occur, when it is not avoided.

Warning means that injury, possibly life-threatening injury, can occur.
Attention means that damage to the appliance can occur.

Note
Notes are indicated with an information symbol.

➔ Arrows indicate instruction steps that should be carried out.

Information about the product

Proper usage

The solar controller is designed for use in solar thermal and heating systems in compliance with the technical data specified in these instructions.
Improper use excludes all liability claims.

Note
Strong electromagnetic fields can impair the function of the controller.

➔ Make sure the controller as well as the system are not exposed to strong electromagnetic fields.

Overview

- **System-monitoring-display**
- **Up to 4 Pt1000 temperature sensors**
- **2 semiconductor relays for pump speed control**
- **10 basic system layouts to choose from**
- **Energy metering**
- **VBus®**
- **Function control**
- **Thermostat function (time controlled)**
- **Control of the system by ServiceCenter software possible**
- **User-friendly operation**
- **Housing with outstanding design**
- **Extra-low power consumption**

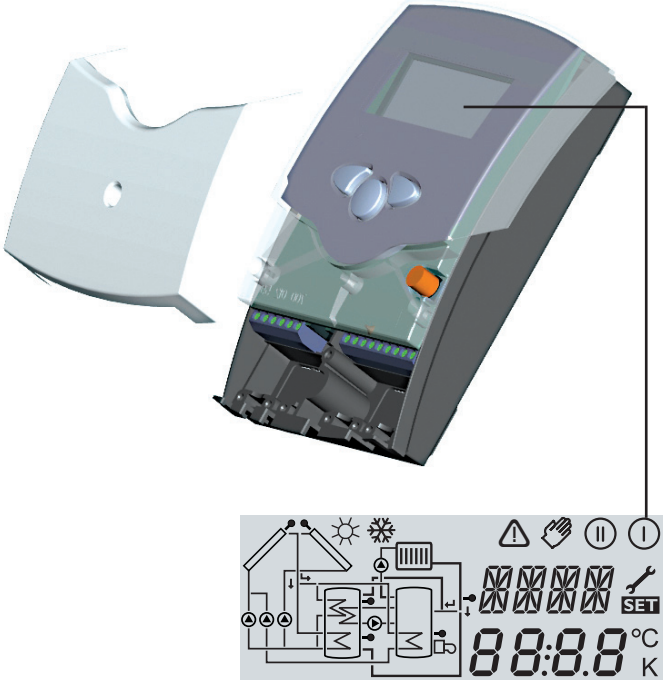

Included with the SOM 7 plus:

1 × SOM 7 plus

1 × accessory bag
- 1 × spare fuse T4A
- 2 × screws and wall plugs
- 4 × strain relief and screws

1 × manual

Additionally enclosed in the full kit:
- 4 × sensor PT 1000
- 1 x heat conducting paste

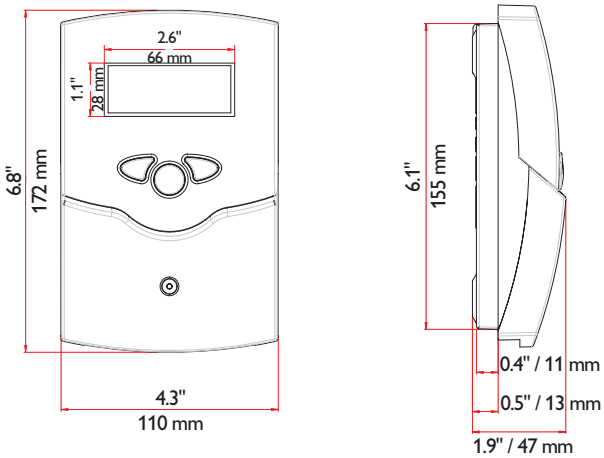

Technical data

Housing: plastic, PC-ABS and PMMA

Protection type: IP 20 / EN 60529

Ambient temp.:
32 ... 104 °F
[0 ... 40 °C]

Size:
6.8" × 4.3" × 1.9"
172 × 110 × 46 mm

Mounting: wall mounting, mounting into patch-panels is possible

Display: System screen for system visualization, 16-segment display, 7-segment display, 8 symbols for system status and operating control lamp

Operation: by 3 push buttons at the front of the housing

Functions: Differential temperature controller with optional add-on system functions. Function control, operating hours counter for solar pump, evacuated tube collector function, pump speed control, thermostat function, drainback and booster option, and energy metering.

Inputs:
for 4 Pt1000 temperature sensors

Outputs: 2 semiconductor relays

Bus: VBus®

Power supply:
100 ... 240 V~

Standby power consumption:
< 1 W

Switching capacities:

R1: 1 (1) A 100 ... 240 V~ (semiconductor relay)

R2: 1 (1) A 100 ... 240 V~ (semiconductor relay)

1. Installation

1.1 Mounting

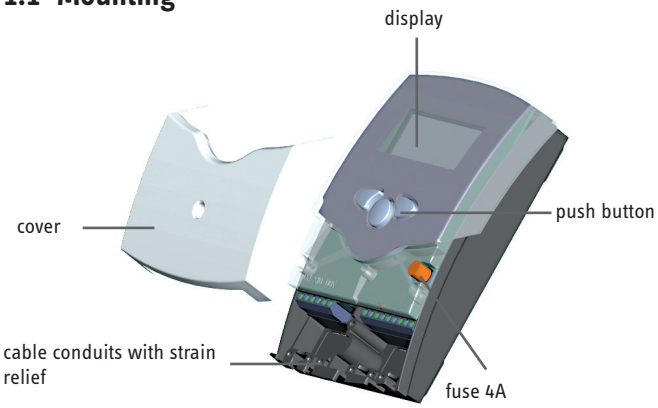

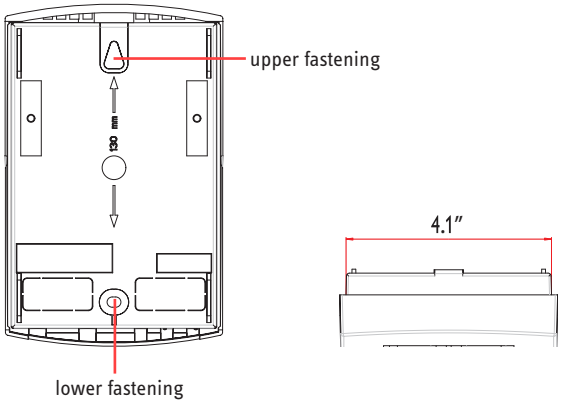

WARNING!	Electric shock! **Opening the housing will expose live parts!** ➔ **Switch off power supply and disconnect the device from power supply before opening the housing!**

The unit must only be installed

- in a dry interior location
- in a non-hazardous location
- away from electromagnetic fields

The controller must additionally be supplied from a double-pole switch with contact gap of at least 0.12".

Route sensor cables and power supply cables separately.

➔ Unscrew the cross-head screw from the cover and remove it along with the cover from the housing

➔ Mark the upper fastening point on the wall and drill

➔ Fasten the enclosed wall plug and screw leaving the head protruding

➔ Hang the housing from the upper fastening point and mark the lower fastening point through the hole in the terminal box (centers 5.1")

➔ Drill and insert the lower wall plug

➔ Fasten the housing to the wall with lower fastening screw and tighten

➔ Complete wiring connections in accordance with terminal allocations, see chap. 1.2 “Electrical connection”

➔ Place the cover back onto the housing

➔ Fasten the cover by means of the cross-head screw

1.2 Electrical connection

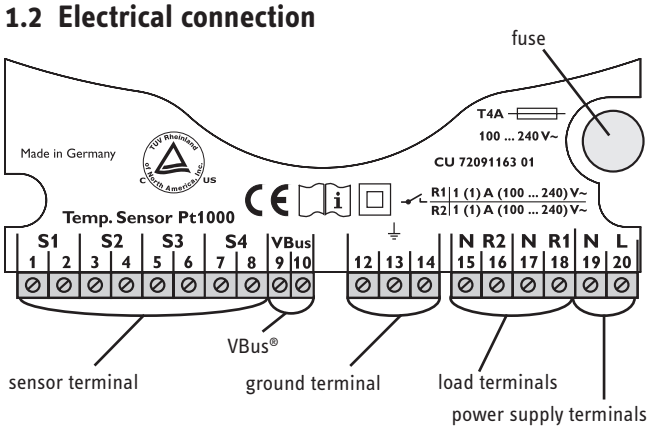

ATTENTION!	ESD damage! Electrostatic discharge can lead to damage to electronic components! ➔ Take care to discharge properly before touching the inside of the device. To do so, touch a grounded surface such as a radiator or tap!

Note:
The minimum pump speed must be set to 100 % when auxiliary relays or valves are connected.

Connecting the device to the power supply must always be the last step of the installation!

The power supply to the controller must be carried out via an external power switch (last step!). The supply voltage must be 100 ... 240 V~ (50 ... 60 Hz). Flexible cables must be attached to the housing with the enclosed strain relief and the corresponding screws.

The controller is equipped with two semiconductor relays, to which **loads** such as pumps, valves etc. can be connected:

- **Relay 1**
  18 = conductor R1
  17 = neutral conductor N
  13 = ground conductor
- **Relay 2**
  16 = conductor R2
  15 = neutral conductor N
  14 = ground conductor

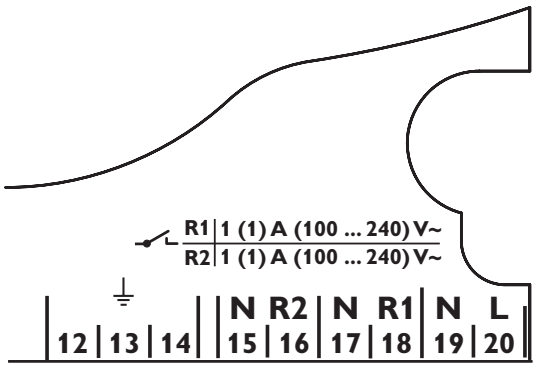

Grounding and load terminals

The **power supply** is to be carried out at the terminals:

19 = neutral conductor N
20 = conductor L
12 = ground terminal ⏚

The **temperature sensors** (S1 up to S4) are to be connected to the following terminals with either polarity:

1 / 2 = Sensor 1 (e.g. Sensor collector 1)
3 / 4 = Sensor 2 (e.g. Sensor tank 1)
5 / 6 = Sensor 3 (e.g. Sensor tank top)
7 / 8 = Sensor 4 (e.g. Sensor return)

All Pt1000 temperature sensors are equipped with a platinum measuring element in their tip. The electrical resistance of the measuring element changes in relation to the temperature (see table in chap. 5).

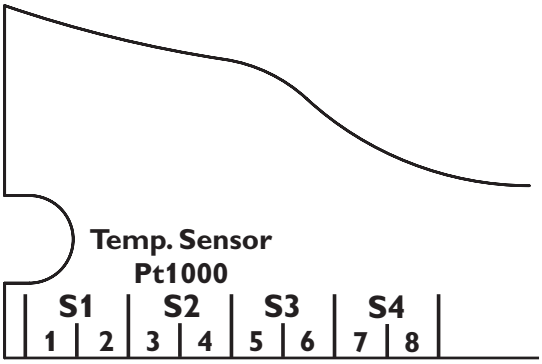

Sensor terminals S1 ... S4

1.3 Data communication/ Bus

The controller is equipped with a **VBus®** for data transfer with and energy supply to external modules. The connection is carried out at the terminals marked “VBus” (either polarity). One or more VBus® modules can be connected via this data bus.

By means of an interface adapter, the controller can be connected to a PC or a computer network.

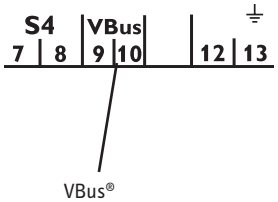

VBus®
connection terminals

1.4 Terminal allocation in the different system layouts

System layout 1

The controller calculates the temperature difference between collector sensor S1 and tank sensor S2. If the difference is larger than or identical to the adjusted switch-on temperature difference (DT O), the solar pump will be operated by relay 1, and the tank will be loaded until the switch-off temperature difference (DT F) or the maximum tank temperature (S MX) is reached.

Sensors S3 and S4 can optionally be connected for measurement purposes.
If energy metering (OHQM) is activated, sensor S4 has to be connected as return sensor.
If the drainback option (ODB) is activated, relay 2 can be used to operate a booster pump by activating the booster function (OBST).

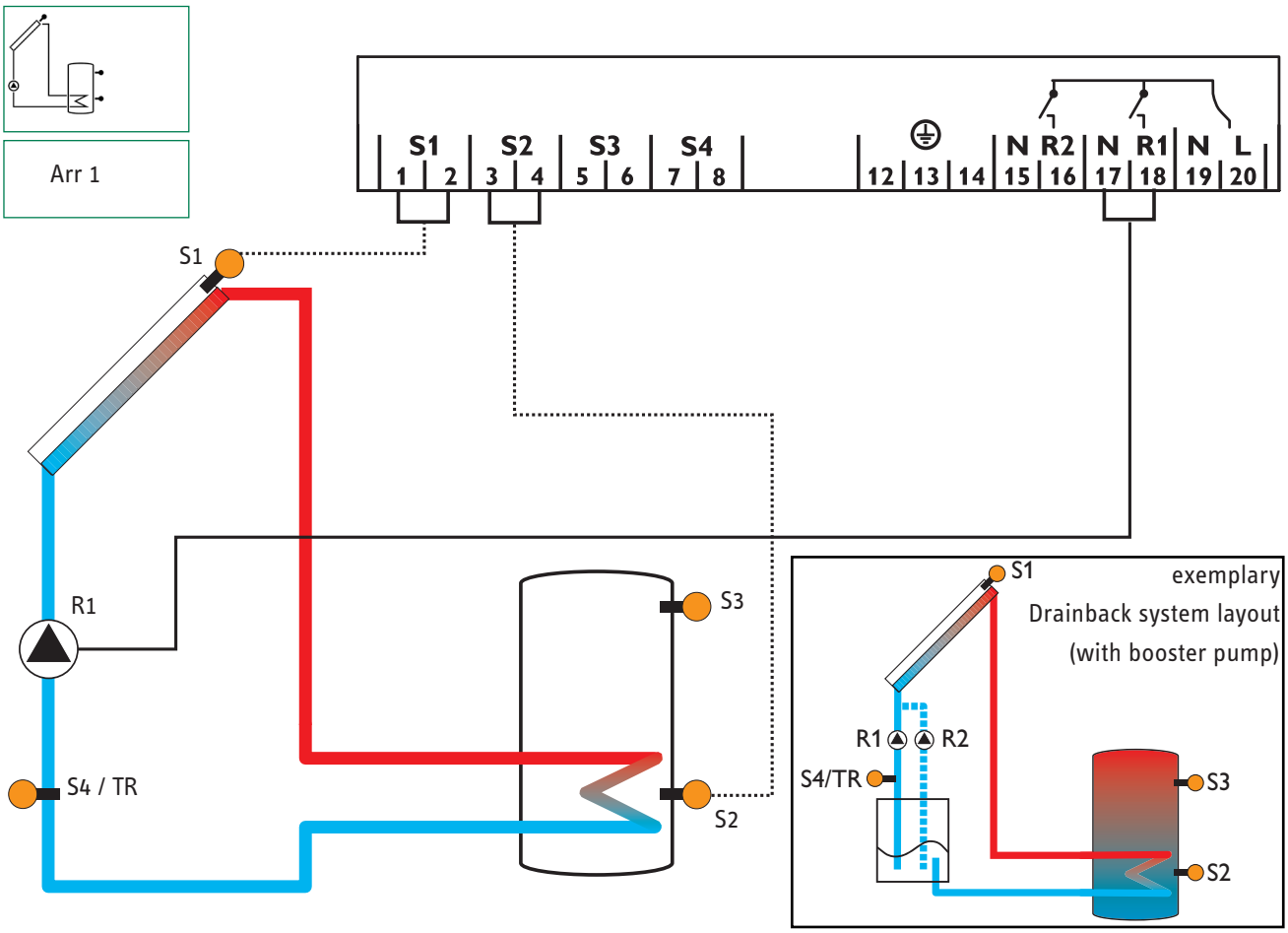

Display Channels				
Channel		Description	Terminal	Page
INIT	x*	ODB initialization active	-	37
FLL	x*	ODB filling time active	-	37
STAB	x*	ODB stabilization in progress	-	37
COL	x	Temperature collector	S1	37
TST	x	Temperature tank	S2	37
S3	x	Temperature sensor 3	S3	37
S4	x	Temperature sensor 4	S4	37
TR	x*	Temperature return sensor	S4	37
n %	x	Pump speed R1	R1	38
hP	x	Operating hours R1	R1	38
hP1	x*	Operating hours R1 (if OBST is activated)	R1	38
hP2	x*	Operating hours R2 (if OBST is activated)	R2	38
kWh	x*	Heat quantity kWh	-	38
MWh	x*	Heat quantity MWh	-	38
TIME	x	Time	-	34

Adjustment Channels				
Channel		Description	Factory setting	Page
Arr	x	System	1	39
DT O	x	Switch-on temperature difference	12.0 °Ra [6.0 K]	39
DT F	x	Switch-off temperature difference	8.0 °Ra [4.0 K]	39
DT S	x	Nominal temperature difference	20.0 °Ra [10.0 K]	39
RIS	x	Rise control R1	4 °Ra [2 K]	39
nMN	x	Minimum pump speed	30 %	39
S MX	x	Maximum tank temperature	140 °F [60 °C]	40
EM	x	Emergency temperature collector	270 °F [130 °C]	40
		Emergency temperature collector if ODB is activated:	200 °F [95 °C]	40
OCC	x	Option collector cooling	OFF	41
CMX	x*	Maximum collector temperature	230 °F [110 °C]	41
OSYC	x	Option system cooling	OFF	41
DTCO	x*	Cooling switch-on temperature difference	40.0 °Ra [20.0 K]	41
DTCF	x*	Cooling switch-off temperature difference	30.0 °Ra [15.0 K]	41
OSTC	x	Option tank cooling	OFF	42
OHOL	x*	Option holiday cooling	OFF	42
THOL	x*	Holiday cooling temperature	110 °F [40 °C]	42
OCN	x	Option minimum limitation	OFF	42
CMN	x*	Minimum collector temperature	50 °F [10 °C]	42
OCF	x	Option antifreeze	OFF	42
CFR	x*	Antifreeze temperature	40.0 °F [4.0 °C]	42
O TC	x	Option tube collector	OFF	44
TCST	x*	OTC starting time	07:00	44
TCEN	x*	OTC ending time	19:00	44
TCRU	x*	OTC runtime	30 s	44
TCIN	x*	OTC standstill interval	30 min	44
OHQM	x	Option energy metering	OFF	44
FMAX	x*	Maximum flow	6.0 l	44
MEDT	x*	Antifreeze type	1	44
MED%	x*	Antifreeze concentration (only if MEDT = propylene or ethylene)	45 %	44
ODB	x	Drainback option	OFF	45
tDTO	x*	ODB switch-on condition - time period	60 s	45
tFLL	x*	ODB filling time	5.0 min	45
tSTB	x*	ODB stabilization time	2.0 min	45
OBST	s*	Option booster function	OFF	45
MAN1	x	Manual operation R1	Auto	46
MAN2	x	Manual operation R2	Auto	46
LANG	x	Language	En	46
UNIT	x	Temperature unit	°C	46
RESE	x	Reset - back to factory defaults		46
W0050100		Version number		

Legend:

Symbol	Specification
x	Channel is available
x*	Channel is available if the corresponding option is activated.
s*	System-specific channel, only available if the corresponding option is activated

System layout 2

The controller calculates the temperature difference between collector sensor S1 and tank sensor S2. If the difference is larger than or identical to the adjusted switch-on temperature difference (DT 0), the solar pump will be operated by relay 1, and the tank will be loaded until the switch-off temperature difference (DT F) or the maximum tank temperature (S MX) is reached.

Heat exchange from tank 1 to tank 2 will be operated by relay 2, if the temperature difference between sensors S3 and S4 is larger than or identical to the adjusted switch-on temperature difference (DT30), until the adjusted minimum (MN30) and maximum (MX30) temperature thresholds of the respective tanks are reached.

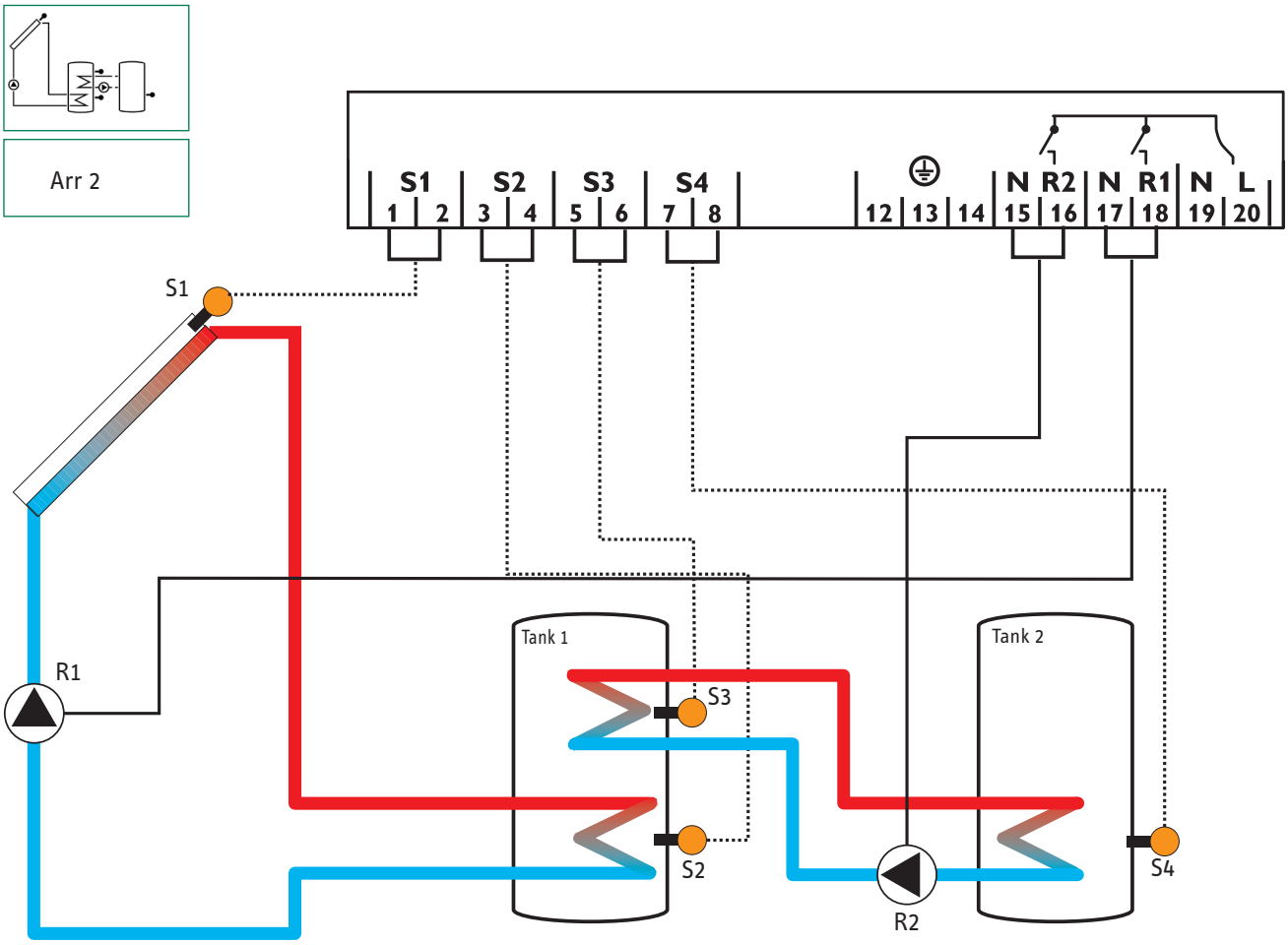

Display Channels				
Channel		Description	Terminal	Page
INIT	x*	ODB initialization active	-	37
FLL	x*	ODB filling time active	-	37
STAB	x*	ODB stabilization in progress	-	37
COL	x	Temperature collector	S1	37
TST1	x	Temperature tank 1 bottom	S2	37
TSTT	x	Temperature tank 1 at the top	S3	37
TST2	x	Temperature tank 2 bottom	S4	37
n1 %	x	Pump speed R1	R1	38
n2 %	x	Pump speed R2	R2	38
h P1	x	Operating hours R1	R1	38
h P2	x	Operating hours R2	R2	38
TIME	x	Time	-	34

Adjustment Channels				
Channel		Description	Factory setting	Page
Arr	x	System	2	39
DT O	x	Switch-on temperature difference	12.0 °Ra [6.0 K]	39
DT F	x	Switch-off temperature difference	8.0 °Ra [4.0 K]	39
DT S	x	Nominal temperature difference	20.0 °Ra [10.0 K]	39
RIS	x	Rise control R1	4 °Ra [2 K]	39
n1MN	x	Minimum pump speed R1	30 %	39
S MX	x	Maximum tank temperature	140 °F [60 °C]	40
n2MN	s	Minimum pump speed R2	30 %	10
EM	x	Emergency temperature collector	270 °F [130 °C]	40
		Emergency temperature collector if ODB is activated:	200 °F [95 °C]	40
OCC	x	Option collector cooling	OFF	41
CMX	x*	Maximum collector temperature	230 °F [110 °C]	41
OSYC	x	Option system cooling	OFF	41
DTCO	x*	Cooling switch-on temperature difference	40.0 °Ra [20.0 K]	41
DTCF	x*	Cooling switch-off temperature difference	30.0 °Ra [15.0 K]	41
OSTC	x	Option tank cooling	OFF	42
OHOL	x*	Option holiday cooling	OFF	42
THOL	x*	Holiday cooling temperature	110 °F [40 °C]	42
OCN	x	Option minimum limitation	OFF	42
CMN	x*	Minimum collector temperature	50 °F [10 °C]	42
OCF	x	Option antifreeze	OFF	42
CFR	x*	Antifreeze temperature	40.0 °F [4.0 °C]	42
O TC	x	Option tube collector	OFF	44
TCST	x*	OTC starting time	07:00	44
TCEN	x*	OTC ending time	19:00	44
TCRU	x*	OTC runtime	30 s	44
TCIN	x*	OTC standstill interval	30 min	44
DT3O	s	Switch-on temperature difference 3	12.0 °Ra [6.0 K]	10
DT3F	s	Switch-off temperature difference 3	8.0 °Ra [4.0 K]	10
DT3S	s	Nominal temperature difference 3	20.0 °Ra [10.0 K]	10
RIS3	s	Rise control R2	4 °Ra [2 K]	10
MX3O	s	Switch-on treshold for maximum temperature	140.0 °F [60.0 °C]	11
MX3F	s	Switch-off treshold for maximum temperature	136.0 °F [58.0 °C]	11
MN3O	s	Switch-on treshold for minimum temperature	40.0 °F [5.0 °C]	11
MN3F	s	Switch-off treshold for minimum temperature	50.0 °F [10.0 °C]	11
ODB	x	Drainback option	OFF	45
tDTO	x*	ODB switch-on condition - time period	60 s	45
tFLL	x*	ODB filling time	5.0 min	45
tSTB	x*	ODB stabilization time	2.0 min	45
MAN1	x	Manual operation R1	Auto	46
MAN2	x	Manual operation R2	Auto	46
LANG	x	Language	En	46
UNIT	x	Temperature unit	°C	46
RESE	x	Reset - back to factory defaults		46
W0050100		Version number		

Legend:

Symbol	Specification
x	Channel is available
x*	Channel is available if the corresponding option is activated.
s	Channel is specifically available in this system layout

System-specific functions

The following adjustments are used for the specific function in system layout 2.

ΔT control for the heat exchange between 2 tanks

DT3O:
Switch-on temperature diff.
Adjustment range: 2.0 ... 40.0°Ra
[1.0 ... 20.0 K]
in steps of 1 °Ra [0.5 K]
Factory setting: 12.0°Ra
[6.0 K]

DT3F:
Switch-off temperature diff.
Adjustment range: 1.0 ... 39.0°Ra
[0.5 ... 19.5 K]
in steps of 1 °Ra [0.5 K]
Factory setting: 8.0°Ra
[4.0 K]

Reference sensors for this function are S3 and S4.

In system layout 2 the controller is equipped with an additional differential control for heat exchange between two tanks. The basic differential function is adjusted using the switch-on (**DT3O**) and switch-off (**DT3F**) temperature differences.

When the temperature difference exceeds the switch-on temperature difference, relay 2 switches on. If the temperature difference then falls below the adjusted switch-off temperature difference, relay 2 switches off.

Note:
The switch-on temperature difference must be at least 1 °Ra [0.5 K] higher than the switch-off temperature difference.

Pump speed control

DT3S:
Nominal temperature difference
Adjustment range: 3.0 ... 60.0 °Ra
[1.5 ... 30.0 K]
in steps of 1 °Ra [0.5 K]
Factory setting: 20.0 °Ra
[10.0 K]

Note:
For pump speed control of the heat exchange pump, the operation mode of relay 2 (**MAN2**) must be set to Auto.

When the switch-on temperature difference is reached, the pump is activated at full speed for 10 seconds. Then, the speed is reduced to the minimum pump speed value (**n2MN**).
If the temperature difference reaches the adjusted nominal temperature difference (**DT3S**), the pump speed increases by one step (10 %). If the difference increases by the adjustable rise value, the pump speed increases by 10 % respectively until the maximum pump speed of 100 % is reached. The response of the controller can be adapted via the parameter **RIS3**.

RIS3:
Rise
Adjustment range:
2 ... 40 °Ra [1 ... 20 K]
in steps of 2 °Ra [1 K]
Factory setting: 4 °Ra [2 K]

Note:
The nominal temperature difference must be at least 1 °Ra [0.5 K] higher than the switch-on temperature difference.

Minimum pump speed

n2MN:
Pump speed control
Adjustment range:30 ... 100
in steps of 5 %
Factory setting: 30

A relative minimum pump speed can be allocated to the output R2 via the adjustment channel **n2MN.**

Note:
When loads which are not speed-controlled (e.g. valves) are used, the value must be set to 100 % in order to deactivate pump speed control.

Maximum temperature limitation

MX3O / MX3F:
Maximum temperature limitation
Adjustment range:
30.0...200.0 °F
[0.0 ... 95.0 °C]
in steps of 1 °Ra [0.5 K]
Factory setting:
MX3O: 140.0 °F [60.0 °C]
MX3F: 136.0 °F [58.0 °C]

Minimum and maximum temperature limits can be set for the heat exchange function.

The maximum temperature limitation uses sensor 4 as reference sensor.

The maximum temperature limitation function provides a maximum temperature setting, usually to reduce scald risk in a storage tank. If **MX3O** is exceeded, relay 2 is switched off until the temperature at sensor 4 falls below **MX3F**.

Minimum temperature limitation

MN3O / MN3F:
Minimum temperature limitation
Adjustment range:
30.0...190.0 °F
[0.0 ... 90.0 °C]
in steps of 1 °Ra [0.5 K]
Factory setting (Arr = 2 only):
MN3O: 40.0 °F [5.0 °C]
MN3F: 50.0 °F [10.0 °C]

The minimum temperature limitation uses sensor 3 as reference sensor.

The minimum temperature limitation function provides a minimum temperature setting for the heat source in system layout 2. If the temperature at sensor 3 falls below **MN3O**, relay 2 is switched off until the temperature at sensor 3 exceeds **MN3F**.

Both switch-on and switch-off temperature differences **DT3O** and **DT3F** are valid for the maximum and minimum temperature limitation.

System layout 3

The controller calculates the temperature difference between collector sensor S1 and tank sensor S2. If the difference is larger than or identical to the adjusted switch-on temperature difference (DT O), the solar pump will be operated by relay 1, and the tank will be loaded until the switch-off temperature difference (DT F) or the maximum tank temperature (S MX) is reached.

Sensor S3 is used for a thermostatic function, which operates relay 2 for backup heating or heat dump purposes, when the adjusted thermostat switch-on temperature (AH O) is reached. This function can optionally be combined with up to three adjustable time frames.

Sensor S3 can also be optionally used as a reference sensor for the thermal disinfection function OTD.

Sensor S4 can optionally be connected for measurement purposes. If energy metering (OHQM) is activated, sensor S4 has to be connected as return sensor.

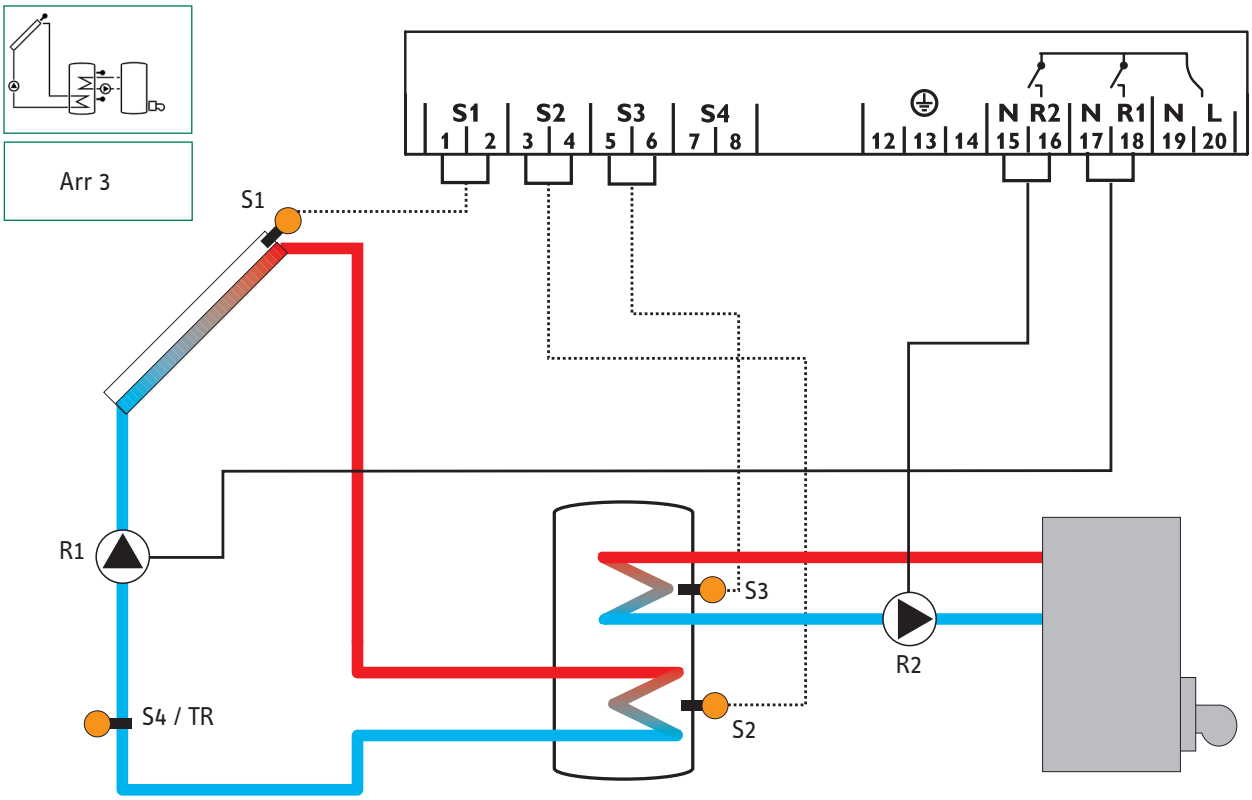

Display Channels				
Channel		Description	Terminal	Page
INIT	x*	ODB initialization active	-	37
FLL	x*	ODB filling time active	-	37
STAB	x*	ODB stabilization in progress	-	37
COL	x	Temperature collector	S1	37
TSTB	x	Temperature tank 1 bottom	S2	37
TSTT	x	Temperature tank 1 at the top	S3	37
TDIS	s*	Thermal disinfection temperature	S3	37
S4	x	Temperature sensor 4	S4	37
TR	x*	Temperature return sensor	S4	37
n1 %	x	Pump speed R1	R1	38
h P1	x	Operating hours R1	R1	38
h P2	x	Operating hours R2	R2	38
kWh	x*	Heat quantity kWh	-	38
MWh	x*	Heat quantity MWh	-	38
CDIS	s*	Countdown of monitoring period	-	38
SDIS	s*	Starting time display	-	38
DDIS	s*	Heating period display	-	38
TIME	x	Time	-	34

Adjustment Channels				
Channel		Description	Factory setting	Page
Arr	x	System	3	39
DT O	x	Switch-on temperature difference	12.0 °Ra [6.0 K]	39
DT F	x	Switch-off temperature difference	8.0 °Ra [4.0 K]	39
DT S	x	Nominal temperature difference	20.0 °Ra [10.0 K]	39
RIS	x	Rise control R1	4 °Ra [2 K]	39
n1MN	x	Minimum pump speed R1	30 %	39
S MX	x	Maximum tank temperature	140 °F [60 °C]	40
EM	x	Emergency temperature collector	270 °F [130 °C]	40
		Emergency temperature collector if ODB is activated:	200 °F [95 °C]	40
OCC	x	Option collector cooling	OFF	41
CMX	x*	Maximum collector temperature	230 °F [110 °C]	41
OSYC	x	Option system cooling	OFF	41
DTCO	x*	Cooling switch-on temperature difference	40.0 °Ra [20.0 K]	41
DTCF	x*	Cooling switch-off temperature difference	30.0 °Ra [15.0 K]	41
OSTC	x	Option tank cooling	OFF	42
OHOL	x*	Option holiday cooling	OFF	42
THOL	x*	Holiday cooling temperature	110 °F [40 °C]	42
OCN	x	Option minimum limitation	OFF	42
CMN	x*	Minimum collector temperature	50 °F [10 °C]	42
OCF	x	Option antifreeze	OFF	42
CFR	x*	Antifreeze temperature	40.0 °F [4.0 °C]	42
O TC	x	Option tube collector	OFF	44
TCST	x*	OTC starting time	07:00	44
TCEN	x*	OTC ending time	19:00	44
TCRU	x*	OTC runtime	30 s	44
TCIN	x*	OTC standstill interval	30 min	44
OHQM	x	Option energy metering	OFF	44
FMAX	x*	Maximum flow	6.0 l	44
MEDT	x*	Antifreeze type	1	44
MED%	x*	Antifreeze concentration	45 %	44
AH O	s	Switch-on temp. for thermostat 1	110 °F [40 °C]	14
AH F	s	Switch-off temp. for thermostat 1	120 °F [45 °C]	14
t1 O	s	Switch-on time 1 thermostat	00:00	14
t1 F	s	Switch-off time 1 thermostat	00:00	14
t2 O	s	Switch-on time 2 thermostat	00:00	14
t2 F	s	Switch-off time 2 thermostat	00:00	14
t3 O	s	Switch-on time 3 thermostat	00:00	14
t3 F	s	Switch-off time 3 thermostat	00:00	14
ODB	x	Drainback option	OFF	45
tDTO	x*	ODB switch-on condition - time period	60 s	45
tFLL	x*	ODB filling time	5.0 min	45
tSTB	x*	ODB stabilization time	2.0 min	45
OTD	s	Option thermal disinfection	OFF	15
PDIS	s*	Monitoring period	01:00	15
DDIS	s*	Heating period	01:00	15
TDIS	s*	Disinfection temperature	140 °F [60 °C]	15
SDIS	s*	Starting time	00:00	15
MAN1	x	Manual operation R1	Auto	46
MAN2	x	Manual operation R2	Auto	46
LANG	x	Language	En	46
UNIT	x	Temperature unit	°C	46
RESE	x	Reset - back to factory defaults		46
W0050100		Version number		

Legend:

Symbol	Specification
x	Channel is available
x*	Channel is available if the corresponding option is activated.
s	Channel is specifically available in this system layout
s*	System-specific channel, only available if the corresponding option is activated

System-specific functions

The following functions are exclusively available in system layout 3. The corresponding channels will not be available in any other system layout.

Thermostat function

Backup heating

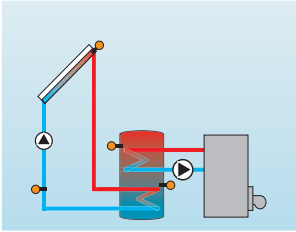

The thermostat function works independently from the solar operation and can be used for using surplus energy or for backup heating.

- **AH O** < **AH F**
  thermostat function for backup heating
- **AH O** > **AH F**
  thermostat function for using surplus energy

Use of surplus energy

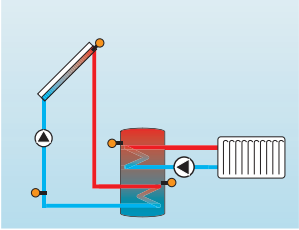

The symbol ⓘ will be shown on the display if the second relay output is activated.

Reference sensor for the thermostat function is S3!

AH O:
Thermostat switch-on temp.
Adjustment range:
30.0... 200.0 °F
[0.0 ... 95.0 °C]
in steps of 1.0 °Ra [0.5 K]
Factory setting:
110.0°F [40.0 °C]

AH F:
Thermostat switch-off temp.
Adjustment range:
30.0... 200.0 °F
[0.0 ... 95.0 °C]
in steps of 1.0 °Ra [0.5 K]
Factory setting:
120.0 °F [45.0 °C]

t1 O, t2 O, t3 O:
Thermostat switch-on time
Adjustment range:
00:00 ... 23:45
Factory setting: 00:00

In order to block the thermostat function for a certain period, there are three time frames t1 ... t3. If the function should be active between 6:00 and 9:00, set **t1 O** to 6:00 and **t1 F** to 9:00. If all time frames are set to 00:00 o'clock, the thermostat function is continuously activated (factory setting).

t1 F, t2 F, t3 F:
Thermostat switch-off time
Adjustment range:
00:00 ... 23:45
Factory setting: 00:00

Option: Thermal disinfection of the upper DHW zone (OTD)

OTD:
Thermal disinfection function
Adjustment range: ON / OFF
Factory setting: OFF

PDIS:
Monitoring period
Adjustment range:
0 ... 30:0 ... 24 h (dd:hh)
Factory setting: 01:00

DDIS
Heating period
Adjustment range:
00:00 ... 23:59 (hh:mm)
Factory setting: 01:00

TDIS
Disinfection temperature
Adjustment range:
30 ... 200 °F
[0 ... 95 °C]
in steps of 2 °F [2 °C]
Factory setting:
140 °F [60 °C]

This function is used for protecting the upper tank zone against Legionella by activating the backup heating.

Reference sensor for the thermal disinfection is S3!

➔ To activate the function, select “On” in the **OTD** channel.

For thermal disinfection, the temperature in the upper DHW tank zone has to be monitored. This protection is ensured when, during the monitoring period (**PDIS**), the disinfection temperature (**TDIS**) is continuously exceeded for the entire heating period (**DDIS**). S3 is used as the reference sensor and displayed as **TSTT**.

If **OTD** is activated, **PDIS** will start as soon as the temperature at S3 falls below **TDIS**. The display channel **CDIS** appears, counting backwards the remaining time of **PDIS**. If, during the monitoring period, the temperature at S3 exceeds **TDIS** continuously for the duration of **DDIS**, thermal disinfection is considered complete and a new monitoring period begins.

If **CDIS** counts down to 00:00, relay 2 will be operated in order to use the backup heating for thermal disinfection. **CDIS** will then be replaced with a display channel **DDIS** showing the adjusted heating period. **DDIS** will start counting down the heating period as soon as **TDIS** is exceeded at S3. As long as **DDIS** is active, the temperature at S3 will be displayed as **TDIS** instead of **TSTT**.

If, during **DDIS**, the temperature at S3 exceeds **TDIS** by more than 10 °Ra [5 K], relay 2 is switched off until the temperature falls below **TDIS** + 4 °Ra [2 K].

If, during **DDIS**, the temperature at S3 falls below **TDIS**, the heating period will restart. **DDIS** can only be completed when **TDIS** is exceeded without interruption.

Due to the flexible control logic, the exact time of thermal disinfection is not predictable. In order to set a fixed time for the disinfection to be run, the starting delay **SDIS** must be employed:

Thermal disinfection with starting delay

SDIS
Starting time
Adjustment range:
00:00 ... 24:00 (o‘clock)
Factory setting: 00:00

When a starting time for thermal disinfection with starting delay is adjusted in **SDIS**, the thermal disinfection will be delayed until that time, even after the **CDIS** has counted down to 00:00. If **CDIS** ends, for example, at 12:00 o‘clock, and **SDIS** has been set to 18:30, relay 2 will be operated with a delay of 6.5 hours at 18:30 instead of 12:00.

During the waiting time, **SDIS** is displayed with the adjusted starting time (flashing).

If, during the waiting time, the temperature at S3 exceeds **TDIS** for the adjusted heating period **DDIS**, thermal disinfection is considered complete and a new monitoring period begins.

If the starting time is adjusted to 00:00 (factory setting), the delay function is inactive.

Upon delivery, **OTD** is deactivated. The adjustment values **PDIS**, **TDIS**, **DDIS** and **SDIS** are displayed after the option has been activated. After the thermal disinfection function has been completed, the values will be “hidden” and the monitoring period will be displayed.

System layout 4

The controller calculates the temperature differences between collector sensor S1 and tank sensors S2 and S3. If the differences are larger than or identical to the adjusted switch-on temperature differences (DT1O / DT2O), the solar pump will be operated by relay 1, and the respective tank zone will be loaded until the switch-off temperature differences (DT1F / DT2F) or the maximum tank temperatures (S1MX / S2MX) are reached. The priority logic causes priority loading of the upper zone of the tank, if possible. The 3-way-valve will be operated by relay 2 then.

Sensor S4 can optionally be connected for measurement purposes.

If energy metering (OHQM) is activated, sensor S4 has to be connected as return sensor.

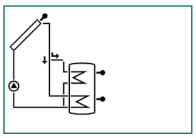

Arr 4

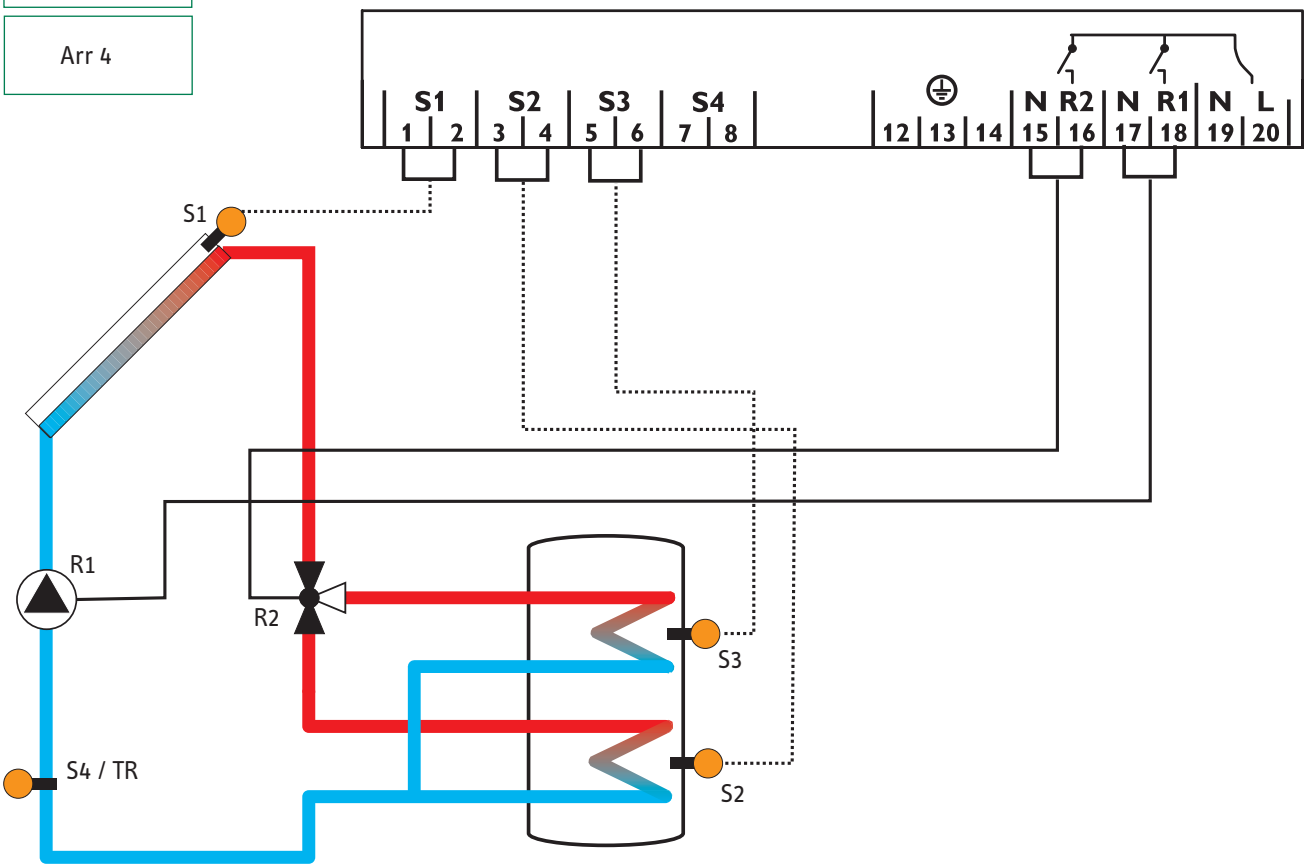

Display Channels				
Channel		Description	Terminal	Page
COL	x	Temperature collector	S1	37
TSTB	x	Temperature tank 1 bottom	S2	37
TSTT	x	Temperature tank 1 at the top	S3	37
S4	x	Temperature sensor 4	S4	37
TR	x*	Temperature return sensor	S4	37
n %	x	Pump speed relay	R1	38
hP1	x	Operating hours R1	R1	38
hP2	x	Operating hours R2	R2	38
kWh	x*	Heat quantity kWh	-	38
MWh	x*	Heat quantity MWh	-	38
TIME	x	Time	-	34

Adjustment Channels				
Channel		Description	Factory setting	Page
Arr	x	System	4	39
nMN	x	Minimum pump speed	30 %	39
DT1O	x	Switch-on temperature difference 1	12.0 °Ra [6.0 K]	39
DT1F	x	Switch-off temperature difference 1	8.0 °Ra [4.0 K]	39
DT1S	x	Nominal temperature difference 1	20.0 °Ra [10.0 K]	39
RIS1	x	Rise control R1	4 °Ra [2 K]	39
S1 MX	x	Maximum temperature tank 1	140 °F [60 °C]	40
DT2O	x	Switch-on temperature difference 2	12.0 °Ra [6.0 K]	39
DT2F	x	Switch-off temperature difference 2	8.0 °Ra [4.0 K]	39
DT2S	x	Nominal temperature difference 2	20.0 °Ra [10.0 K]	39
RIS2	x	Rise control R2	4 °Ra [2 K]	39
S2MX	x	Maximum temperature tank 2	140 °F [60 °C]	40
EM	x	Emergency temperature collector	270 °F [130 °C]	40
OCC	x	Option collector cooling	OFF	41
CMX	x*	Maximum collector temperature	230 °F [110 °C]	41
OSYC	x	Option system cooling	OFF	41
DTCO	x*	Cooling switch-on temperature difference	40.0 °Ra [20.0 K]	41
DTCF	x*	Cooling switch-off temperature difference	30.0 °Ra [15.0 K]	41
OSTC	x	Option tank cooling	OFF	42
OHOL	x*	Option holiday cooling	OFF	42
THOL	x*	Holiday cooling temperature	110 °F [40 °C]	42
OCN	x	Option minimum limitation	OFF	42
CMN	x*	Minimum collector temperature	50 °F [10 °C]	42
OCF	x	Option antifreeze	OFF	42
CFR	x*	Antifreeze temperature	40.0 °F [4.0 °C]	42
PRIO	x	Priority	2	43
tLB	x	Break time	2 min	43
tRUN	x	Circulation runtime	15 min	43
O TC	x	Option tube collector	OFF	44
TCST	x*	OTC starting time	07:00	44
TCEN	x*	OTC ending time	19:00	44
TCRU	x*	OTC runtime	30 s	44
TCIN	x*	OTC standstill interval	30 min	44
OHQM	x	Option energy metering	OFF	44
FMAX	x*	Maximum flow	6.0 l	44
MEDT	x*	Antifreeze type	1	44
MED%	x*	Antifreeze concentration (only if MEDT = propylene or ethylene)	45 %	44
MAN1	x	Manual operation R1	Auto	46
MAN2	x	Manual operation R2	Auto	46
LANG	x	Language	En	46
UNIT	x	Temperature unit	°C	46
RESE	x	Reset - back to factory defaults		46
W0050100		Version number		

Legend:

Symbol	Specification
x	Channel is available
x*	Channel is available if the corresponding option is activated.

System layout 5

The controller calculates the temperature differences between collector sensor S1 and tank sensors S2 and S3. If the differences are larger than or identical to the adjusted switch-on temperature differences (DT1O / DT2O), the solar pump will be operated by relay 1, and the respective tank will be loaded until the switch-off temperature differences (DT1F / DT2F) or the maximum tank temperatures (S1MX / S2MX) are reached.

The priority logic causes priority loading of tank 1, if possible. For loading tank 2 the 3-way-valve will be operated by relay 2. Sensor S4 can optionally be connected for measurement purposes.
If energy metering (OHQM) is activated, sensor S4 has to be connected as return sensor.

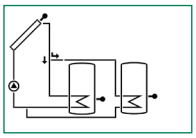

Arr 5

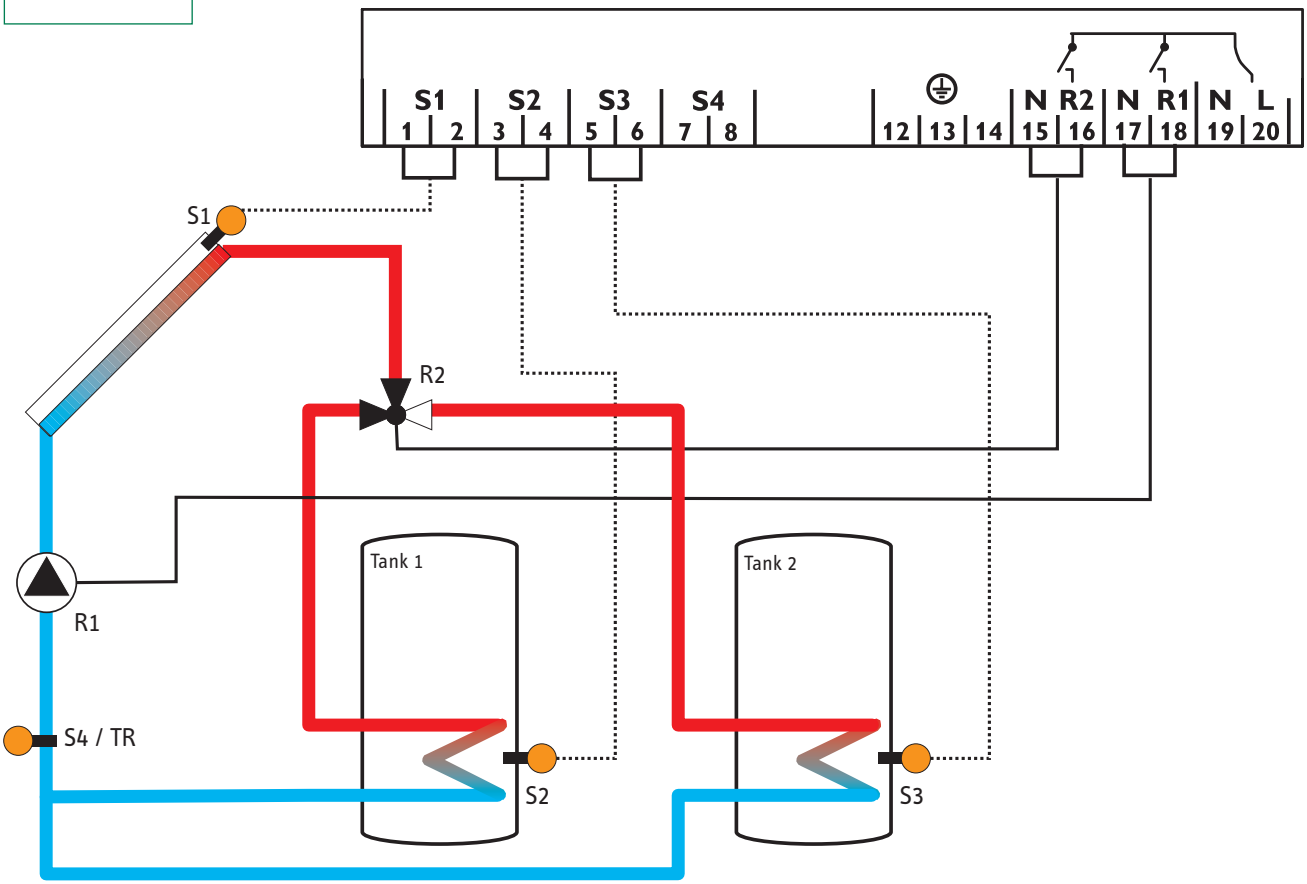

Display Channels				
Channel		Description	Terminal	Page
COL	x	Temperature collector	S1	37
TST1	x	Temperature tank 1 bottom	S2	37
TST2	x	Temperature tank 2 bottom	S3	37
S4	x	Temperature sensor 4	S4	37
TR	x*	Temperature return sensor	S4	37
n %	x	Pump speed relay	R1	38
hP1	x	Operating hours R1	R1	38
hP2	x	Operating hours R2	R2	38
kWh	x*	Heat quantity kWh	-	38
MWh	x*	Heat quantity MWh	-	38
TIME	x	Time	-	34

Adjustment Channels				
Channel		Description	Factory setting	Page
Arr	x	System	5	39
nMN	x	Minimum pump speed	30 %	39
DT1O	x	Switch-on temperature difference 1	12.0 °Ra [6.0 K]	39
DT1F	x	Switch-off temperature difference 1	8.0 °Ra [4.0 K]	39
DT1S	x	Nominal temperature difference 1	20.0 °Ra [10.0 K]	39
RIS1	x	Rise control R1	4 °Ra [2 K]	39
S1 MX	x	Maximum temperature tank 1	140 °F [60 °C]	40
DT2O	x	Switch-on temperature difference 2	12.0 °Ra [6.0 K]	39
DT2F	x	Switch-off temperature difference 2	8.0 °Ra [4.0 K]	39
DT2S	x	Nominal temperature difference 2	20.0 °Ra [10.0 K]	39
RIS2	x	Rise control R2	4 °Ra [2 K]	39
S2MX	x	Maximum temperature tank 2	140 °F [60 °C]	40
EM	x	Emergency temperature collector	270 °F [130 °C]	40
OCC	x	Option collector cooling	OFF	41
CMX	x*	Maximum collector temperature	230 °F [110 °C]	41
OSYC	x	Option system cooling	OFF	41
DTCO	x*	Cooling switch-on temperature difference	40.0 °Ra [20.0 K]	41
DTCF	x*	Cooling switch-off temperature difference	30.0 °Ra [15.0 K]	41
OSTC	x	Option tank cooling	OFF	42
OHOL	x*	Option holiday cooling	OFF	42
THOL	x*	Holiday cooling temperature	110 °F [40 °C]	42
OCN	x	Option minimum limitation	OFF	42
CMN	x*	Minimum collector temperature	50 °F [10 °C]	42
OCF	x	Option antifreeze	OFF	42
CFR	x*	Antifreeze temperature	40.0 °F [4.0 °C]	42
PRIO	x	Priority	1	43
tLB	x	Break time	2 min	43
tRUN	x	Circulation runtime	15 min	43
O TC	x	Option tube collector	OFF	44
TCST	x*	OTC starting time	07:00	44
TCEN	x*	OTC ending time	19:00	44
TCRU	x*	OTC runtime	30 s	44
TCIN	x*	OTC standstill interval	30 min	44
OHQM	x	Option energy metering	OFF	44
FMAX	x*	Maximum flow	6.0 l	44
MEDT	x*	Antifreeze type	1	44
MED%	x*	Antifreeze concentration (only if MEDT = propylene or ethylene)	45 %	44
MAN1	x	Manual operation R1	Auto	46
MAN2	x	Manual operation R2	Auto	46
LANG	x	Language	En	46
UNIT	x	Temperature unit	°C	46
RESE	x	Reset - back to factory defaults		46
W0050100		Version number		

Legend:

Symbol	Specification
x	Channel is available
x*	Channel is available if the corresponding option is activated.

System layout 6

The controller calculates the temperature differences between collector sensor S1 and tank sensors S2 and S3. If the differences are larger than or identical to the adjusted switch-on temperature differences (DT1O / DT2O), the solar pumps will be operated by relay 1 and / or relay 2, and the respective tank will be loaded until the switch-off temperature differences (DT1F / DT2F) or the maximum tank temperatures (S1MX / S2MX) are reached. The priority logic causes priority loading of the selected tank (PRIO), if possible. Loading both tanks simultaneously is possible as well (PRIO = 0).
Sensor S4 can optionally be connected for measurement purposes.

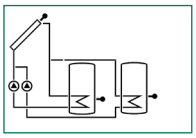

Arr 6

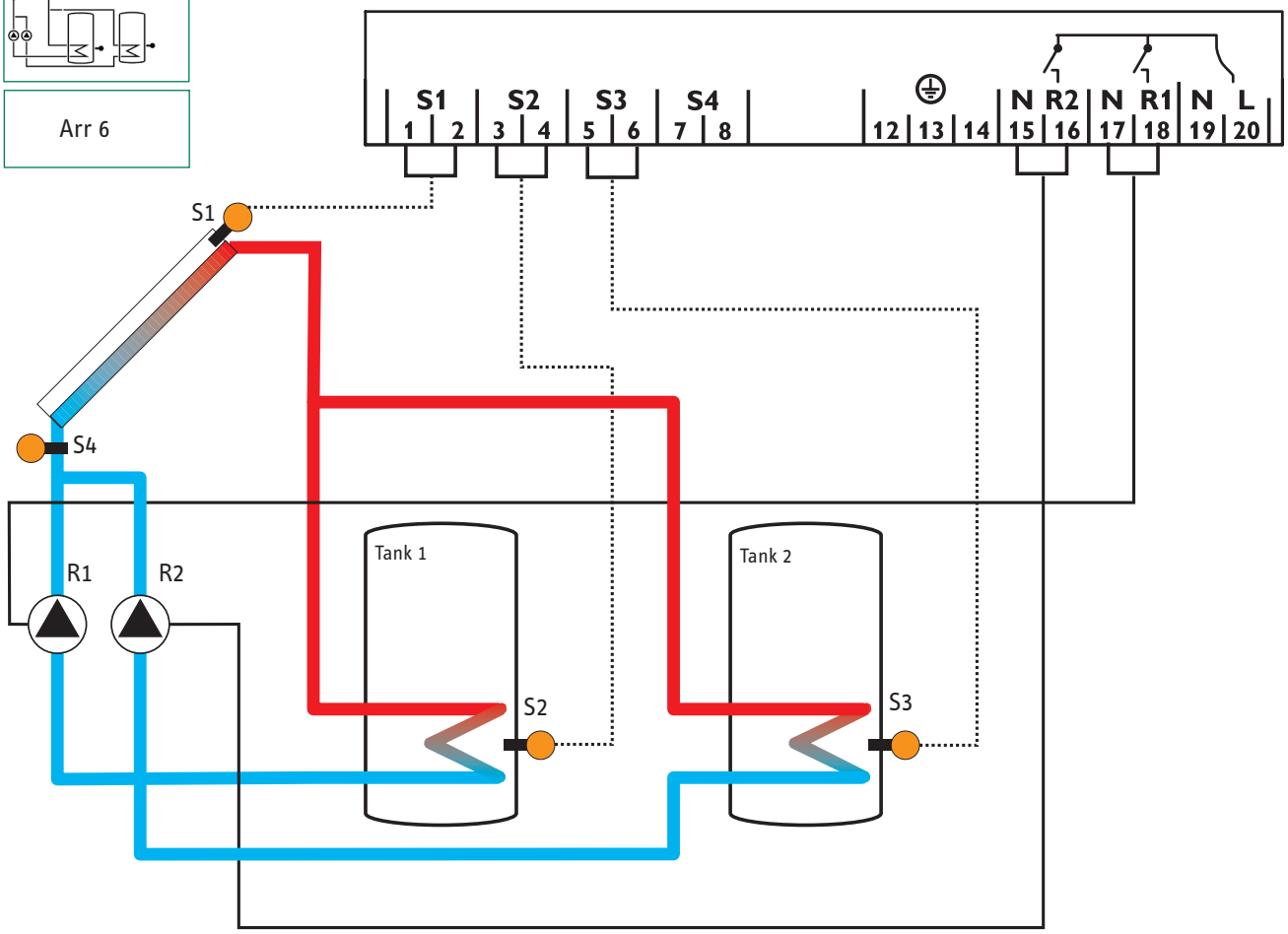

Display Channels				
Channel		Description	Terminal	Page
COL	x	Temperature collector	S1	37
TST1	x	Temperature tank 1 bottom	S2	37
TST2	x	Temperature tank 2 bottom	S3	37
S4	x	Temperature sensor 4	S4	37
n1 %	x	Pump speed R1	R1	38
n2 %	x	Pump speed R2	R2	38
h P1	x	Operating hours R1	R1	38
h P2	x	Operating hours R2	R2	38
TIME	x	Time	-	34

Adjustment Channels				
Channel		Description	Factory setting	Page
Arr	x	System	6	39
DT1O	x	Switch-on temperature difference 1	12.0 °Ra [6.0 K]	39
DT1F	x	Switch-off temperature difference 1	8.0 °Ra [4.0 K]	39
DT1S	x	Nominal temperature difference 1	20.0 °Ra [10.0 K]	39
RIS1	x	Rise control R1	4 °Ra [2 K]	39
n1MN	x	Minimum pump speed R1	30 %	39
S1 MX	x	Maximum temperature tank 1	140 °F [60 °C]	40
DT2O	x	Switch-on temperature difference 2	12.0 °Ra [6.0 K]	39
DT2F	x	Switch-off temperature difference 2	8.0 °Ra [4.0 K]	39
DT2S	x	Nominal temperature difference 2	20.0 °Ra [10.0 K]	39
RIS2	x	Rise control R2	4 °Ra [2 K]	39
n2MN	x	Minimum pump speed R2	30 %	39
S2MX	x	Maximum temperature tank 2	140 °F [60 °C]	40
EM	x	Emergency temperature collector	270 °F [130 °C]	40
OCC	x	Option collector cooling	OFF	41
CMX	x*	Maximum collector temperature	230 °F [110 °C]	41
OSYC	x	Option system cooling	OFF	41
DTCO	x*	Cooling switch-on temperature difference	40.0 °Ra [20.0 K]	41
DTCF	x*	Cooling switch-off temperature difference	30.0 °Ra [15.0 K]	41
OSTC	x	Option tank cooling	OFF	42
OHOL	x*	Option holiday cooling	OFF	42
THOL	x*	Holiday cooling temperature	110 °F [40 °C]	42
OCN	x	Option minimum limitation	OFF	42
CMN	x*	Minimum collector temperature	50 °F [10 °C]	42
OCF	x	Option antifreeze	OFF	42
CFR	x*	Antifreeze temperature	40.0 °F [4.0 °C]	42
PRIO	x	Priority	1	43
tLB	x	Break time	2 min	43
tRUN	x	Circulation runtime	15 min	43
DTSE	x*	Spread temperature difference	70 °Ra [40 K]	43
O TC	x	Option tube collector	OFF	44
TCST	x*	OTC starting time	07:00	44
TCEN	x*	OTC ending time	19:00	44
TCRU	x*	OTC runtime	30 s	44
TCIN	x*	OTC standstill interval	30 min	44
MAN1	x	Manual operation R1	Auto	46
MAN2	x	Manual operation R2	Auto	46
LANG	x	Language	En	46
UNIT	x	Temperature unit	°C	46
RESE	x	Reset - back to factory defaults		46
W0050100		Version number		

Legend:

Symbol	Specification
x	Channel is available
x*	Channel is available if the corresponding option is activated.

System layout 7

The controller calculates the temperature differences between the collector sensors S1 and S3 and the tank sensor S2. If the differences are larger than or identical to the adjusted switch-on temperature difference (DT O), the respective solar pump will be operated by relay 1 and / or relay 2, and the tank will be loaded until the switch-off temperature difference (DT F) or the maximum tank temperature (S MX) is reached.
Sensor S4 can optionally be connected for measurement purposes.

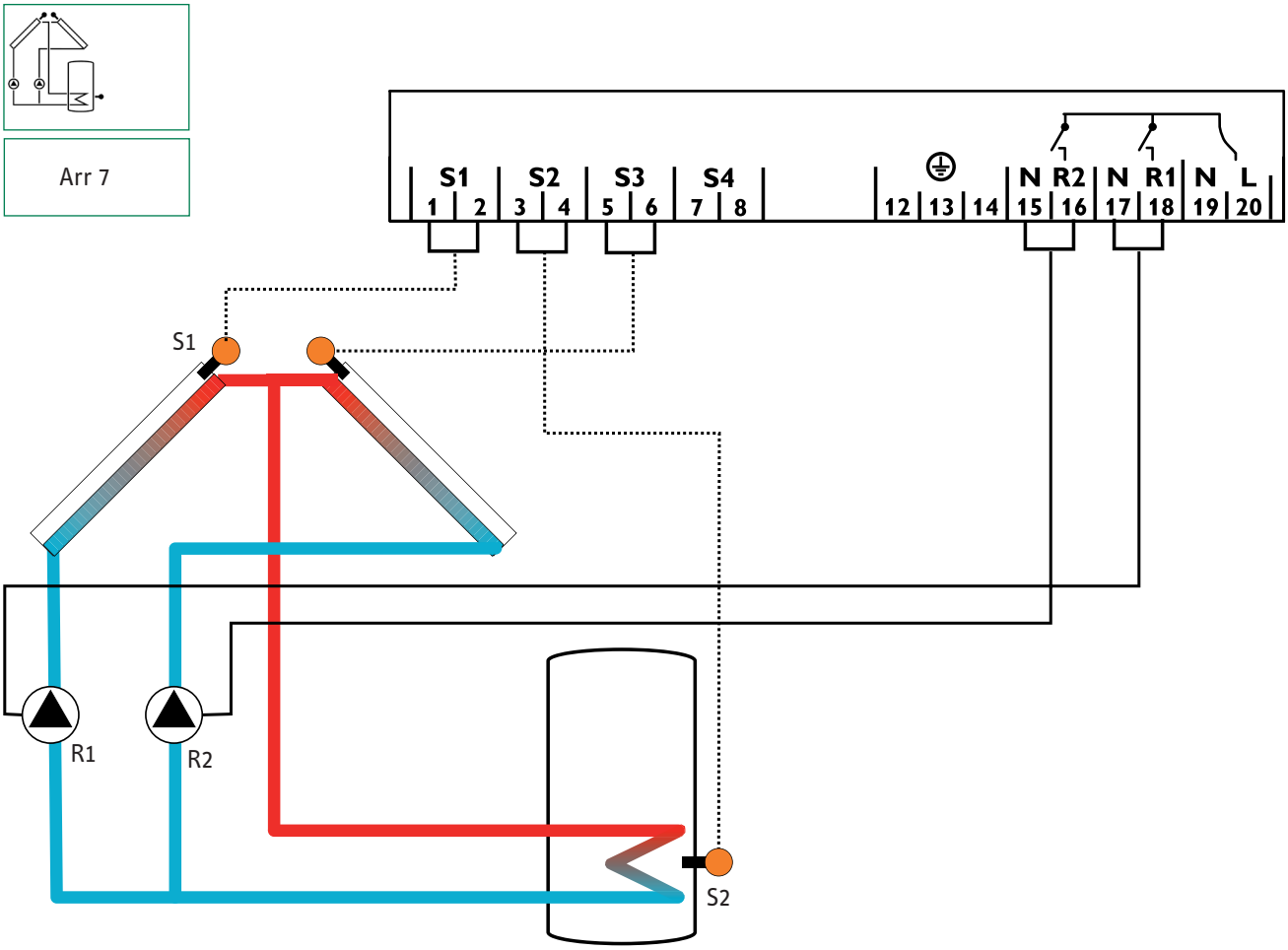

Display Channels				
Channel		Description	Terminal	Page
COL1	x	Temperature collector 1	S1	37
TST	x	Temperature tank	S2	37
COL2	x	Temperature collector 2	S3	37
S4	x	Temperature sensor 4	S4	37
n1 %	x	Pump speed R1	R1	38
n2 %	x	Pump speed R2	R2	38
h P1	x	Operating hours R1	R1	38
h P2	x	Operating hours R2	R2	38
TIME	x	Time	-	34

Adjustment Channels				
Channel		Description	Factory setting	Page
Arr	x	System	7	39
DT O	x	Switch-on temperature difference	12.0 °Ra [6.0 K]	39
DT F	x	Switch-off temperature difference	8.0 °Ra [4.0 K]	39
DT S	x	Nominal temperature difference	20.0 °Ra [10.0 K]	39
RIS	x	Rise control R1 / R2	4 °Ra [2 K]	39
n1MN	x	Minimum pump speed R1	30 %	39
S MX	x	Maximum tank temperature	140 °F [60 °C]	40
n2MN	x	Minimum pump speed R2	30 %	39
EM1	x	Emergency temperature collector	270 °F [130 °C]	40
EM2	x	Emergency temperature collector	270 °F [130 °C]	40
OCC1	x	Option collector cooling collector 1	OFF	41
CMX1	x*	Maximum temperature collector 1	230 °F [110 °C]	41
OCC2	x	Option collector cooling collector 2	OFF	41
CMX2	x*	Maximum temperature collector 2	230 °F [110 °C]	41
OSYC	x	Option system cooling	OFF	41
DTCO	x*	Cooling switch-on temperature difference	40.0 °Ra [20.0 K]	41
DTCF	x*	Cooling switch-off temperature difference	30.0 °Ra [15.0 K]	41
OSTC	x	Option tank cooling	OFF	42
OHOL	x*	Option holiday cooling	OFF	42
THOL	x*	Holiday cooling temperature	110 °F [40 °C]	42
OCN1	x	Option minimum limitation collector 1	OFF	42
CMN1	x*	Minimum temperature collector 1	50 °F [10 °C]	42
OCN2	x	Option minimum limitation collector 2	OFF	42
CMN2	x*	Minium temperature collector 2	50 °F [10 °C]	42
OCF1	x	Option antifreeze collector 1	OFF	42
CFR1	x*	Antifreeze temperature collector 1	40.0 °F [4.0 °C]	42
OCF2	x	Option antifreeze collector 2	OFF	42
CFR2	x*	Antifreeze temperature collector 2	40.0 °F [4.0 °C]	42
O TC	x	Option tube collector	OFF	44
TCST	x*	OTC starting time	07:00	44
TCEN	x*	OTC ending time	19:00	44
TCRU	x*	OTC runtime	30 s	44
TCIN	x*	OTC standstill interval	30 min	44
MAN1	x	Manual operation R1	Auto	46
MAN2	x	Manual operation R2	Auto	46
LANG	x	Language	En	46
UNIT	x	Temperature unit	°C	46
RESE	x	Reset - back to factory defaults		46
W0050100		Version number		

Legend:

Symbol	Specification
x	Channel is available
x*	Channel is available if the corresponding option is activated.

System layout 8

The controller calculates the temperature difference between collector sensor S1 and tank sensor S2. If the difference is larger than or identical to the adjusted switch-on temperature difference (DT 0), the solar pump will be operated by relay 1, and the tank will be loaded until the switch-off temperature difference (DT F) or the maximum tank temperature (S MX) is reached.

A solid fuel boiler will be operated by relay 2, if the temperature difference between sensors S4 and S3 is larger than or identical to the adjusted switch-on temperature difference (DT30), until the adjusted minimum (MN30) and maximum (MX30) temperature thresholds of the fuel boiler and the tank are reached.

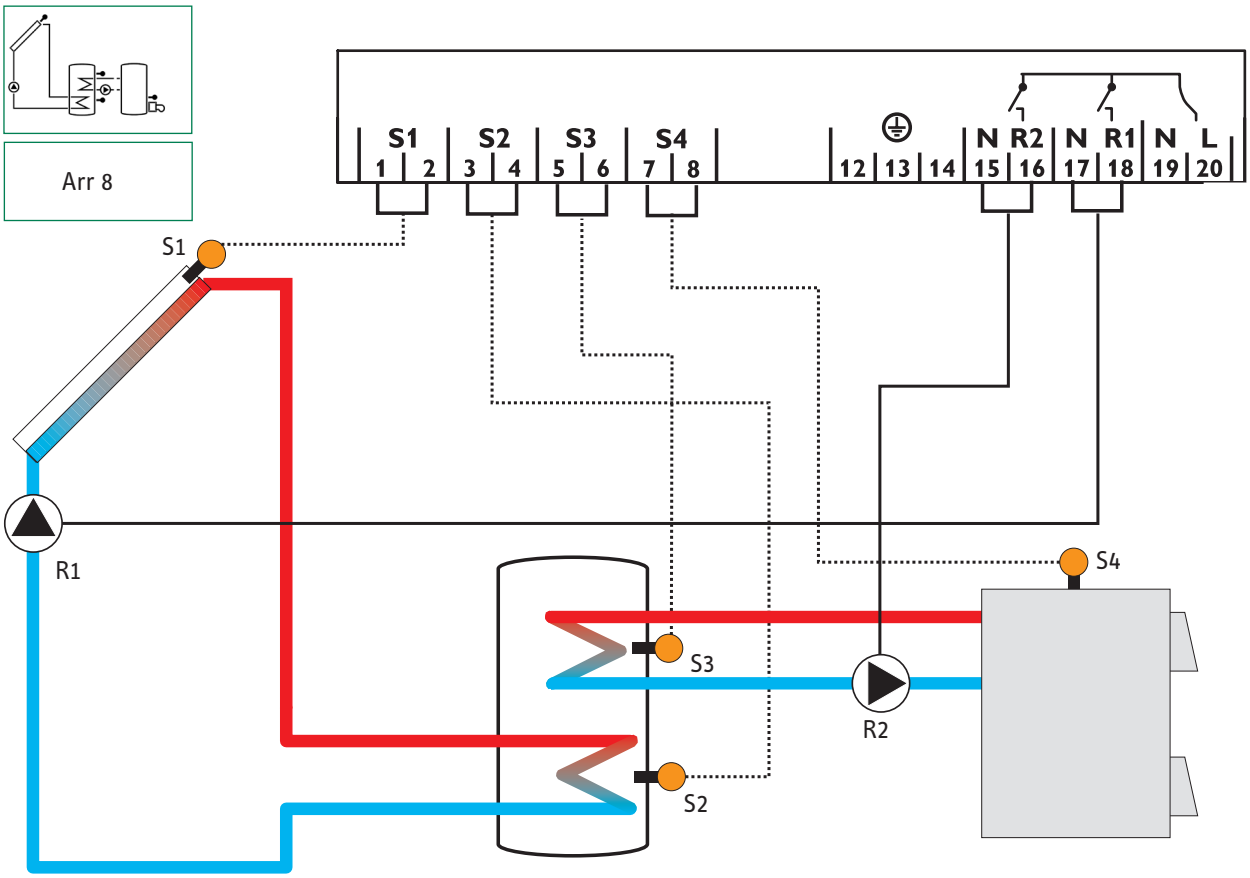

Display Channels				
Channel		Description	Terminal	Page
INIT	x*	ODB initialization active	-	37
FLL	x*	ODB filling time active	-	37
STAB	x*	ODB stabilization in progress	-	37
COL	x	Temperature collector	S1	37
TSTB	x	Temperature tank 1 bottom	S2	37
TSTT	x	Temperature tank 1 at the top	S3	37
TSFB	x	Temperature solid fuel boiler	S4	37
n1 %	x	Pump speed R1	R1	38
n2 %	x	Pump speed R2	R2	38
h P1	x	Operating hours R1	R1	38
h P2	x	Operating hours R2	R2	38
TIME	x	Time	-	34

Adjustment Channels				
Channel		Description	Factory setting	Page
Arr	x	System	8	39
DT O	x	Switch-on temperature difference	12.0 °Ra [6.0 K]	39
DT F	x	Switch-off temperature difference	8.0 °Ra [4.0 K]	39
DT S	x	Nominal temperature difference	20.0 °Ra [10.0 K]	39
RIS	x	Rise control R1	4 °Ra [2 K]	39
n1MN	x	Minimum pump speed R1	30 %	39
S MX	x	Maximum tank temperature	140 °F [60 °C]	40
n2MN	s	Minimum pump speed R2	30 %	26
EM	x	Emergency temperature collector	270 °F [130 °C]	40
		Emergency temperature collector if ODB is activated:	200 °F [95 °C]	40
OCC	x	Option collector cooling	OFF	41
CMX	x*	Maximum collector temperature	230 °F [110 °C]	41
OSYC	x	Option system cooling	OFF	41
DTCO	x*	Cooling switch-on temperature difference	40.0 °Ra [20.0 K]	41
DTCF	x*	Cooling switch-off temperature difference	30.0 °Ra [15.0 K]	41
OSTC	x	Option tank cooling	OFF	42
OHOL	x*	Option holiday cooling	OFF	42
THOL	x*	Holiday cooling temperature	110 °F [40 °C]	42
OCN	x	Option minimum limitation	OFF	42
CMN	x*	Minimum collector temperature	50 °F [10 °C]	42
OCF	x	Option antifreeze	OFF	42
CFR	x*	Antifreeze temperature	40.0 °F [4.0 °C]	42
O TC	x	Option tube collector	OFF	44
TCST	x*	OTC starting time	07:00	44
TCEN	x*	OTC ending time	19:00	44
TCRU	x*	OTC runtime	30 s	44
TCIN	x*	OTC standstill interval	30 min	44
DT3O	s	Switch-on temperature difference 3	12.0 °Ra [6.0 K]	26
DT3F	s	Switch-off temperature difference 3	8.0 °Ra [4.0 K]	26
DT3S	s	Nominal temperature difference 3	20.0 °Ra [10.0 K]	26
RIS3	s	Rise control R2	4 °Ra [2 K]	26
MX3O	s	Switch-on treshold for maximum temperature	140.0 °F [60.0 °C]	27
MX3F	s	Switch-off treshold for maximum temperature	136.0 °F [58.0 °C]	27
MN3O	s	Switch-on treshold for minimum temperature	140.0 °F [60.0 °C]	27
MN3F	s	Switch-off treshold for minimum temperature	150.0 °F [65.0 °C]	27
ODB	x	Drainback option	OFF	45
tDTO	x*	ODB switch-on condition - time period	60 s	45
tFLL	x*	ODB filling time	5.0 min	45
tSTB	x*	ODB stabilization time	2.0 min	45
MAN1	x	Manual operation R1	Auto	46
MAN2	x	Manual operation R2	Auto	46
LANG	x	Language	En	46
UNIT	x	Temperature unit	°C	46
RESE	x	Reset - back to factory defaults		46
W0050100		Version number		

Legend:

Symbol	Specification
x	Channel is available
x*	Channel is available if the corresponding option is activated.
s	Channel is specifically available in this system layout

System-specific functions

The following adjustments are used for the specific functions in system layout 8.

ΔT control for backup heating by solid fuel boiler

DT3O:
Switch-on temperature diff.
Adjustment range: 2.0 ... 40.0°Ra
[1.0 ... 20.0 K]
in steps of 1 °Ra [0.5 K]
Factory setting: 12.0°Ra
[6.0 K]

DT3F:
Switch-off temperature diff.
Adjustment range: 1.0 ... 39.0°Ra
[0.5 ... 19.5 K]
in steps of 1 °Ra [0.5 K]
Factory setting: 8.0°Ra
[4.0 K]

Reference sensors for this function are S4 and S3.

In system layout 8, the controller is equipped with an additional differential control for heat exchange from a solid fuel boiler (e.g. woodstove). The basic differential function is adjusted using the switch-on (**DT3O**) and switch-off (**DT3F**) temperature differences.

When the switch-on difference is reached, relay 2 switches on. When the temperature difference falls below the adjusted switch-off temperature difference, relay 2 switches off.

Note:
The switch-on temperature difference must be at least 1 °Ra [0.5 K] higher than the switch-off temperature difference.

Pump speed control

DT3S:
Nominal temperature difference
Adjustment range: 3.0 ... 60.0 °Ra
[1.5 ... 30.0 K]
in steps of 1 °Ra [0.5 K]
Factory setting: 20.0 °Ra
[10.0 K]

RIS3:
Rise
Adjustment range:
2 ... 40 °Ra [1 ... 20 K]
in steps of 2 °Ra [1 K]
Factory setting: 4 °Ra [2 K]

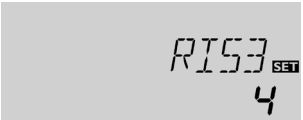

Note:
For pump speed control of the solid fuel boiler pump, the operation mode of relay 2 (**MAN2**) must be set to Auto.

When the switch-on temperature difference is reached, the pump is activated at full speed for 10 seconds. Then, the speed is reduced to the minimum pump speed value (**n2MN**).
If the temperature difference reaches the adjusted nominal temperature difference (**DT3S**), the pump speed increases by one step (10 %). If the difference increases by the adjustable rise value, the pump speed increases by 10 % respectively until the maximum pump speed of 100 % is reached. The response of the controller can be adapted via the parameter **RIS3**.

Note:
The nominal temperature difference must be at least 1 °Ra [0.5 K] higher than the switch-on temperature difference.

Minimum pump speed

n2MN:
Pump speed control
Adjustment range:30 ... 100
in steps of 5 %
Factory setting: 30

A relative minimum pump speed can be allocated to the output R2 via the adjustment channel **n2MN.**

Note:
When loads which are not speed-controlled (e.g. valves) are used, the value must be set to 100 % in order to deactivate pump speed control.

Maximum temperature limitation

MX3O / MX3F:
Maximum temperature limitation
Adjustment range:
30.0...200.0 °F
[0.0 ... 95.0 °C]
in steps of 1 °Ra [0.5 K]
Factory setting:
MX3O: 140.0 °F [60.0 °C]
MX3F: 136.0 °F [58.0 °C]

Minimum and maximum temperature limits can be set for the solid fuel boiler.

The maximum temperature limitation function provides a maximum temperature setting, usually to reduce scald risk in a storage tank. If **MX3O** is exceeded, relay 2 is switched off until the sensor falls below **MX3F.** TIn Arr 8, this function uses sensor 3 as reference sensor.

Minimum temperature limitation

MN3O / MN3F:
Minimum temperature limitation
Adjustment range:
30.0...190.0 °F
[0.0 ... 90.0 °C]
in steps of 1 °Ra [0.5 K]
Factory setting (Arr = 8 only):
MN3O: 140.0 °F [60.0 °C]
MN3F: 150.0 °F [65.0 °C]

The minimum temperature limitation uses sensor 4 as reference sensor.

The minimum temperature limitation function provides a minimum temperature setting for the solid fuel boiler in system layout 8. If the temperature at sensor 4 falls below **MN3O**, relay 2 is switched off until the temperature exceeds **MN3F** again.

Both switch-on and switch-off temperature differences **DT3O** and **DT3F** are valid for the maximum and minimum temperature limitation.

System layout 9

The controller calculates the temperature difference between collector sensor S1 and tank sensor S2. If the difference is larger than or identical to the adjusted switch-on temperature difference (DT O), the solar pump will be operated by relay 1, and the tank will be loaded until the switch-off temperature difference (DT F) or the maximum tank temperature (S MX) is reached.

A heating circuit return preheating will be operated by relay 2, if the temperature difference between sensors S3 and S4 is larger than or identical to the adjusted switch-on temperature difference (DT3O). For this purpose, relay 2 will operate the 3-way-valve.

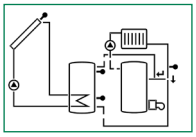

Arr 9

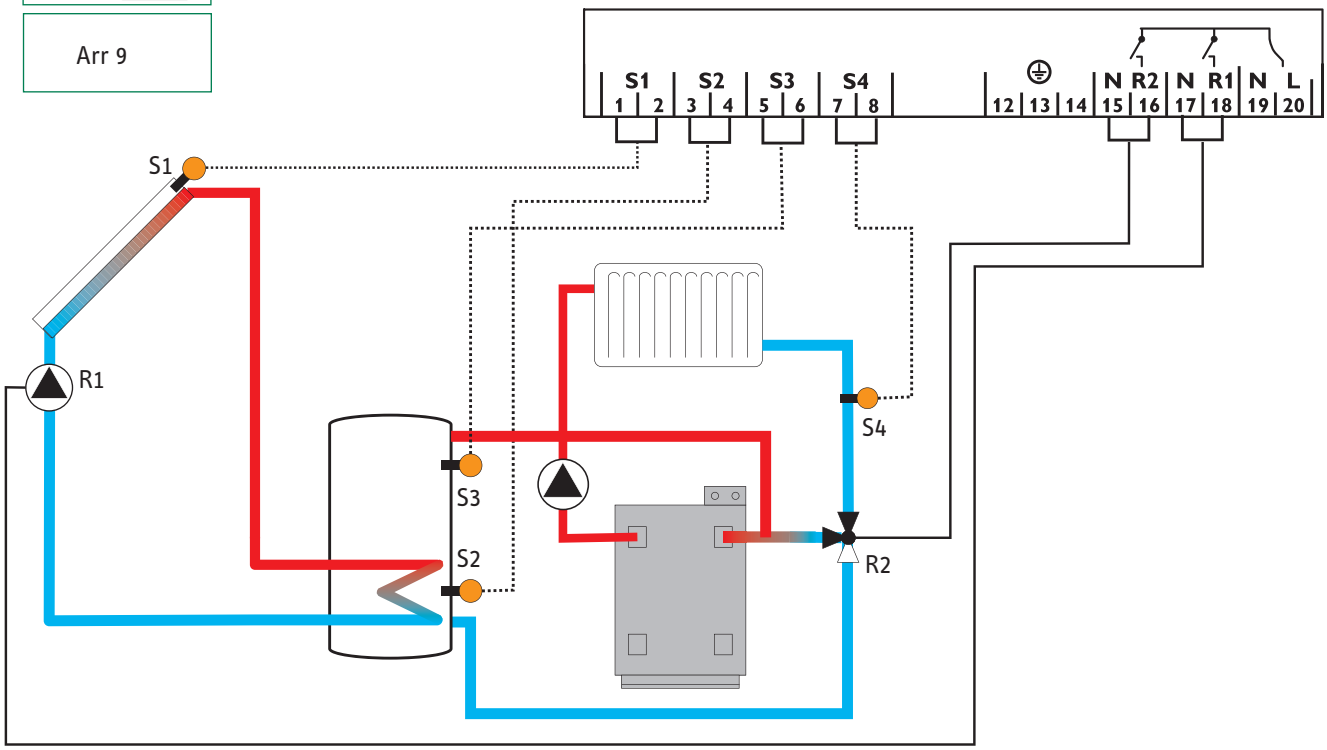

Display Channels				
Channel		Description	Terminal	Page
INIT	x*	ODB initialization active	-	37
FLL	x*	ODB filling time active	-	37
STAB	x*	ODB stabilization in progress	-	37
COL	x	Temperature collector	S1	37
TSTB	x	Temperature tank 1 bottom	S2	37
TSTT	x	Temperature tank 1 at the top	S3	37
TRET	x	Temperature heating circuit	S4	38
n %	x	Pump speed relay	R1	38
hP1	x	Operating hours R1	R1	38
hP2	x	Operating hours R2	R2	38
TIME	x	Time	-	34

Adjustment Channels				
Channel		Description	Factory setting	Page
Arr	x	System	9	39
DT O	x	Switch-on temperature difference	12.0 °Ra [6.0 K]	39
DT F	x	Switch-off temperature difference	8.0 °Ra [4.0 K]	39
DT S	x	Nominal temperature difference	20.0 °Ra [10.0 K]	39
RIS	x	Rise control R1	4 °Ra [2 K]	39
nMN	x	Minimum pump speed	30 %	39
S MX	x	Maximum tank temperature	140 °F [60 °C]	40
EM	x	Emergency temperature collector	270 °F [130 °C]	40
		Emergency temperature collector if ODB is activated:	200 °F [95 °C]	40
OCC	x	Option collector cooling	OFF	41
CMX	x*	Maximum collector temperature	230 °F [110 °C]	41
OSYC	x	Option system cooling	OFF	41
DTCO	x*	Cooling switch-on temperature difference	40.0 °Ra [20.0 K]	41
DTCF	x*	Cooling switch-off temperature difference	30.0 °Ra [15.0 K]	41
OSTC	x	Option tank cooling	OFF	42
OHOL	x*	Option holiday cooling	OFF	42
THOL	x*	Holiday cooling temperature	110 °F [40 °C]	42
OCN	x	Option minimum limitation	OFF	42
CMN	x*	Minimum collector temperature	50 °F [10 °C]	42
OCF	x	Option antifreeze	OFF	42
CFR	x*	Antifreeze temperature	40.0 °F [4.0 °C]	42
O TC	x	Option tube collector	OFF	44
TCST	x*	OTC starting time	07:00	44
TCEN	x*	OTC ending time	19:00	44
TCRU	x*	OTC runtime	30 s	44
TCIN	x*	OTC standstill interval	30 min	44
DT3O	s	Switch-on temperature difference 3	12.0 °Ra [6.0 K]	39
DT3F	s	Switch-off temperature difference 3	8.0 °Ra [4.0 K]	39
ODB	x	Drainback option	OFF	45
tDTO	x*	ODB switch-on condition - time period	60 s	45
tFLL	x*	ODB filling time	5.0 min	45
tSTB	x*	ODB stabilization time	2.0 min	45
MAN1	x	Manual operation R1	Auto	46
MAN2	x	Manual operation R2	Auto	46
LANG	x	Language	En	46
UNIT	x	Temperature unit	°C	46
RESE	x	Reset - back to factory defaults		46
W0050100		Version number		

Legend:

Symbol	Specification
x	Channel is available
x*	Channel is available if the corresponding option is activated.
s	Channel is specifically available in this system layout

System layout 10

The controller calculates the temperature difference between collector sensor S1 and tank sensor S2. If the difference is larger than or identical to the adjusted switch-on temperature difference (DT O), the solar pump will be operated by relay 1, and the tank will be loaded until the switch-off temperature difference (DT F) or the maximum tank temperature (S MX) is reached.
If the maximum collector temperature (CMX) is reached, the solar pump will be operated by relay 1 and the 3-way-valve will be operated by relay 2 in order to direct the surplus energy to a heat dump. For security purpose this will be carried out only if the tank temperature is below the non-adjustable emergency shutdown of 200 °F.
Sensors S3 and S4 can optionally be connected for measurement purposes.
If energy metering (OHQM) is activated, sensor S4 has to be connected as return sensor.

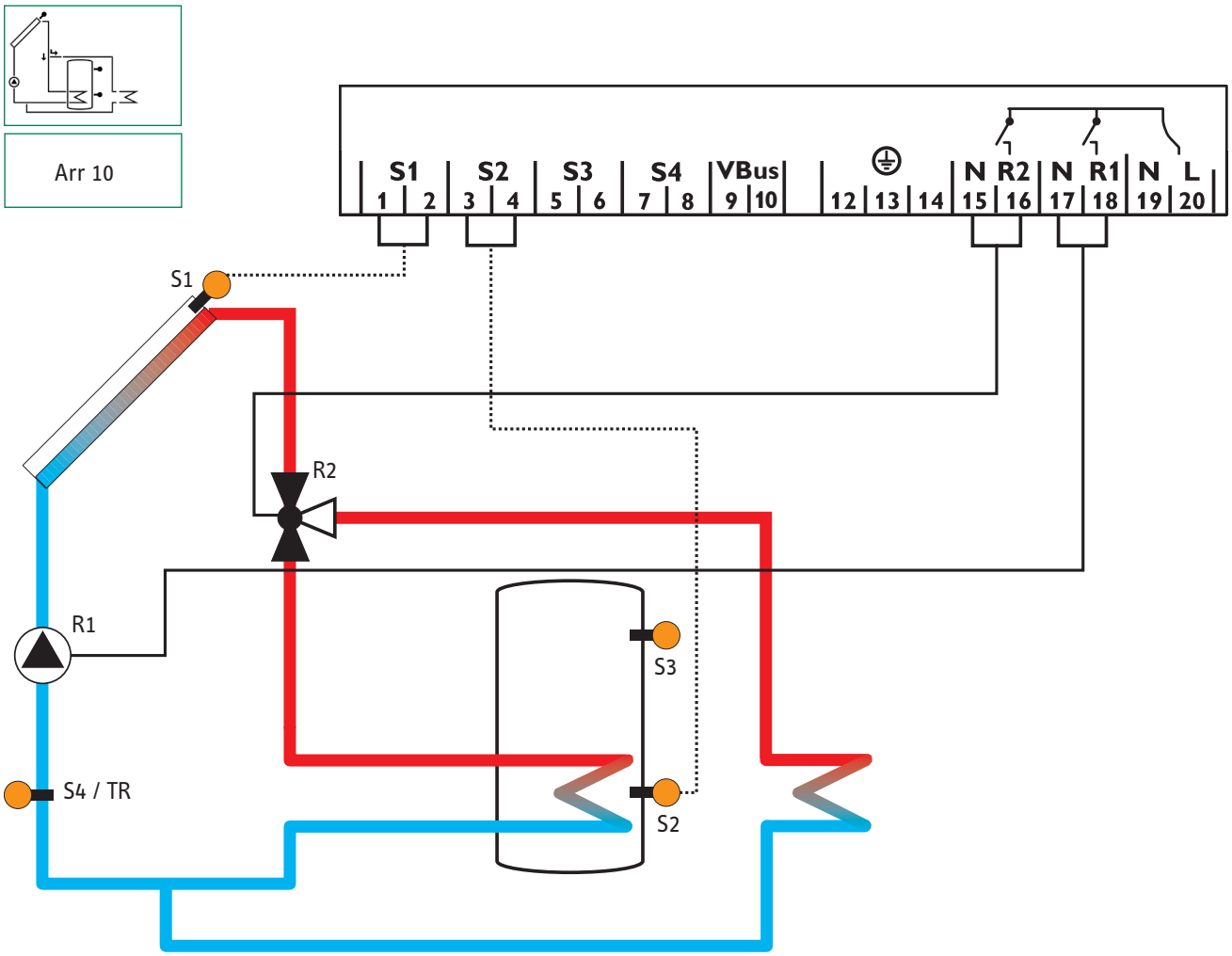

Display Channels				
Channel		Description	Terminal	Page
COL	x	Temperature collector	S1	37
TST	x	Temperature tank	S2	37
S3	x	Temperature sensor 3	S3	37
S4	x	Temperature sensor 4	S4	37
TR	x*	Temperature return sensor	S4	37
n %	x	Pump speed relay	R1	30
h P1	x	Operating hours R1	R1	38
h P2	x	Operating hours R2	R2	38
kWh	x*	Heat quantity kWh	-	38
MWh	x*	Heat quantity MWh	-	38
TIME	x	Time	-	34

Adjustment Channels				
Channel		Description	Factory setting	Page
Arr	x	System	10	39
DT O	x	Switch-on temperature difference	12.0 °Ra [6.0 K]	39
DT F	x	Switch-off temperature difference	8.0 °Ra [4.0 K]	39
DT S	x	Nominal temperature difference	20.0 °Ra [10.0 K]	39
RIS	x	Rise control R1	4 °Ra [2 K]	39
nMN	x	Minimum pump speed	30 %	39
S MX	x	Maximum tank temperature	140 °F [60 °C]	40
EM	x	Emergency temperature collector	270 °F [130 °C]	40
CMX	s	Maximum collector temperature	230 °F [110 °C]	41
OCN	x	Option minimum limitation	OFF	42
CMN	x*	Minimum collector temperature	50 °F [10 °C]	42
OCF	x	Option antifreeze	OFF	42
CFR	x*	Antifreeze temperature	40.0 °F [4.0 °C]	42
O TC	x	Option tube collector	OFF	44
TCST	x*	OTC starting time	07:00	44
TCEN	x*	OTC ending time	19:00	44
TCRU	x*	OTC runtime	30 s	44
TCIN	x*	OTC standstill interval	30 min	44
OHQM	x	Option energy metering	OFF	44
FMAX	x*	Maximum flow	6.0 l	44
MEDT	x*	Antifreeze type	1	44
MED%	x*	Antifreeze concentration (only if MEDT = propylene or ethylene)	45 %	44
MAN1	x	Manual operation R1	Auto	46
MAN2	x	Manual operation R2	Auto	46
LANG	x	Language	En	46
UNIT	x	Temperature unit	°C	46
RESE	x	Reset - back to factory defaults		46
W0050100		Version number		

Legend:

Symbol	Specification
x	Channel is available
x*	Channel is available if the corresponding option is activated.
s	Channel is specifically available in this system layout

2. Operation and function

2.1 Push buttons

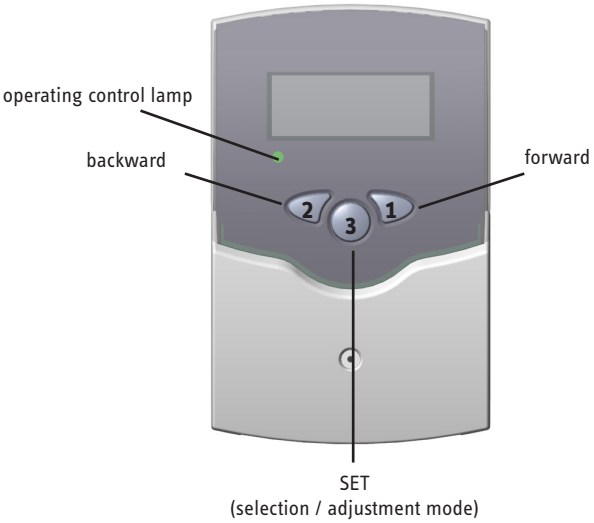

The controller is operated via three push buttons below the display. Button 1 is used for scrolling forward through the indication menu or to increase the adjustment values. Button 2 is used for scrolling backward and reducing values.

During normal operation, only the display channels are shown.

➔ Scroll through the display channels by pressing buttons 1 and 2

Accessing the adjustment channels:

➔ Scroll down in the display menu and press the forward button (1) for approx. two seconds after you have reached the last display item.

When an **adjustment value** is shown on the display, **SET** is indicated to the right of the channel name.

➔ Press the "Set" button (3) in order to access the adjustment mode

SET starts flashing.

➔ Adjust the value using buttons 1 and 2

➔ Briefly press button 3, **SET** permanently appears,the adjusted value will be saved.

2.2 System monitoring display

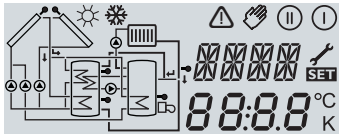

system monitoring display

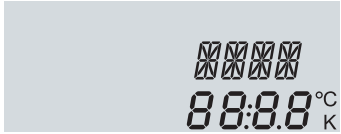

channel display

tool bar

The system monitoring display consists of three blocks: **channel display, tool bar** and **system screen** (active system layout).

The **channel display** consists of two lines. The upper line is an alpha-numeric 16-segment display (text display) for displaying channel names and menu items. In the lower 7-segment display, the channel values and the adjustment parameters are displayed.
Temperatures are either indicated in °F or °C, whereas temperature differences are indicated in K or °Ra respectively.

The additional symbols of the **tool bar** indicate the current system status.

Status	standard	flashing
relay 1 active	I	
relay 2 active	II	
maximum tank temperature exceeded	☼	
tank emergency shutdown active		⚠ + ☼
collector emergency shutdown active		⚠
collector cooling active	I	☼
system cooling active	I	☼
tank cooling active	I + ☼	
holiday cooling function activated	☼	⚠
holiday cooling function active	I + ☼	⚠
collector minimum limitation active		❄
antifreeze function activated	❄	
antifreeze function active	I / II	❄
manual operation relay 1 ON	✋ + I	⚠
manual operation relay 2 ON	✋ + II	⚠
manual operation relay 1 / 2 OFF	✋	⚠
sensor defective	🔧	⚠

System screen

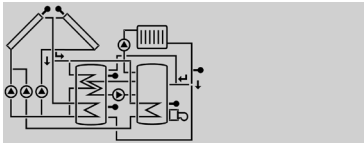

system screen

The system screen (active system layout) shows the system selected on the controller. It consists of several system component symbols, which are – depending on the current status of the system – either flashing, permanently shown or hidden.

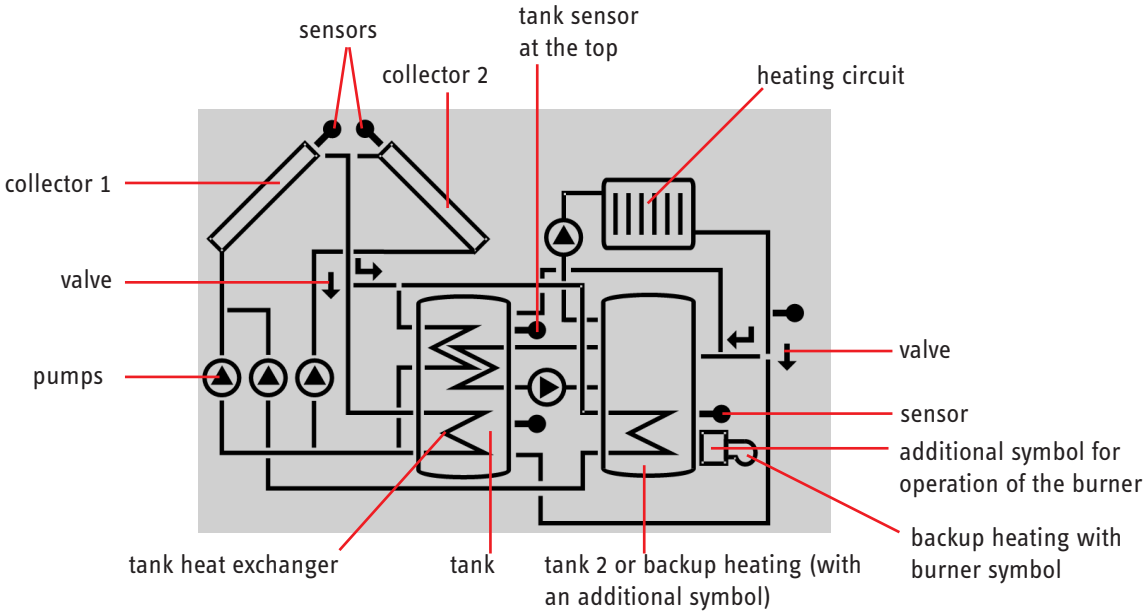

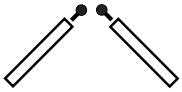

Collectors
with collector sensor

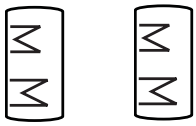

Tanks 1 and 2
with heat exchanger

3-way valve
The flow direction or the actual switching position is shown

Temperature sensor

Heating circuit

Pump

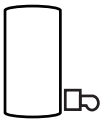

Backup heating
with burner symbol

2.3 Flashing codes

System screen flashing codes

- Pumps are flashing when the corresponding relay is switched on
- Sensor symbols are flashing if the corresponding sensor display channel is selected
- Sensors are flashing quickly in the case of a sensor fault
- Burner symbol is flashing if the backup heating is active

LED flashing codes

green:	everything OK
red/green flashing	initialization phase manual operation
red flashing:	sensor fault (sensor symbol is flashing quickly)

3. Commissioning

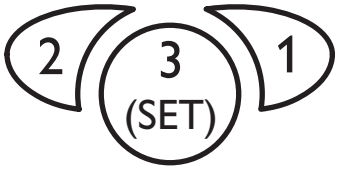

The three pushbuttons of the SOM 7 plus controller

➔ Establish the power supply
During a short initialization phase, the operating control lamp flashes red and green.

When the controller is commissioned for the first time or after a reset, it will run a commissioning menu. The commissioning menu leads the user through the most important adjustment channels needed for operating the system.

Operating the commissioning menu:

➔ Enter the channel by pressing button 3

The SET symbol flashes.

➔ Adjust the value by pressing buttons 1 and 2

➔ Save the adjustment by pressing button 3 again

The SET symbol stops flashing.

➔ Press button 1 or 2 to switch to the next or previous channel

The commissioning menu consists of the following 6 channels:

LANG:
Language selection
Selection: dE, En
Factory setting: En

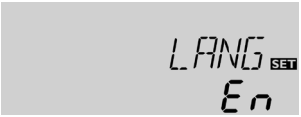

1. Language

➔ Adjust the desired menu language in this channel

- dE : German
- En : English

UNIT:
Temperature unit selection
Selection: °F, °C
Factory setting: °C

2. Unit

➔ Adjust the unit in which temperatures and temperature differences shall be displayed

TIME:
Real time adjustment

3. Time

➔ Adjust the current time for the real time clock

The hours and minutes have to be adjusted separately, first the hours, then the minutes.

Arr:
System layout selection
Adjustment range: 1 ... 10
Factory setting: 1

4. System layout

➔ Adjust the desired system layout of your solar thermal system

For a detailed description of the different system layouts selectable, see chapter 1.4.

Overview of system layouts:

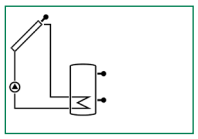
Arr 1

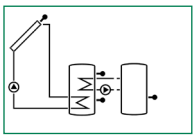
Arr 2

Arr 1 : standard solar system layout
Arr 2 : solar system layout with heat exchange

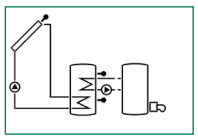
Arr 3

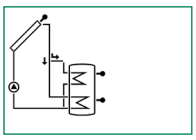
Arr 4

Arr 3 : solar system layout with backup heating
Arr 4 : solar system layout with vertical tank charging

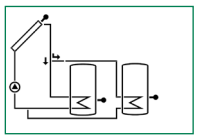
Arr 5

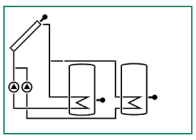
Arr 6

Arr 5 : 2-tank solar system layout with valve logic
Arr 6 : 2-tank solar system layout with pump logic

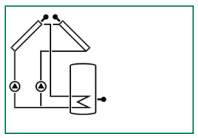
Arr 7

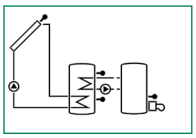
Arr 8

Arr 7 : solar system layout with 2 collectors and 1 tank
Arr 8 : solar system layout with backup heating by solid fuel boiler

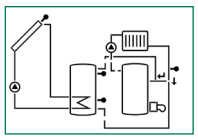
Arr 9

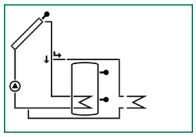
Arr 10

Arr 9 : solar system layout with heating circuit return preheating
Arr 10: standard solar system layout with heat dump

If the system layout selection is changed later on, any previous adjustments which have been made in the other channels will be lost. Therefore, changing the system layout is always followed by a security enquiry.

Only confirm the security enquiry if you are sure that you wish to change the system layout selection!

Security enquiry:

➔ To confirm the security enquiry, press button 3

S MX / S1MX / S2MX:
Maximum tank temp.
Adjustment range:
40 ... 200 °F [4 ... 95 °C]
Arr 10:
40 ... 190 °F [4 ... 90 °C]
in steps of 2 °Ra [1 K]
Factory setting:140 °F [60 °C]

5. Maximum tank temperature

➔ Adjust the desired maximum tank temperature

Note:
The controller is also equipped with a non-adjustable emergency shutdown function, which will shut the system down if the tank reaches 200 °F [95 °C].

nMN, n1MN, n2MN:
Pump speed control
Adjustment range:30 ... 100
in steps of 5 %
Factory setting: 30

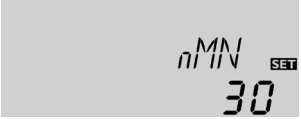

6. Minimum pump speed

➔ Adjust a minimum speed for the pump

Note:
If loads which are not speed-controlled (e.g. valves) are used, the value must be set to 100 % for the respective relay.

Confirmation enquiry

Completing the commissioning menu

After the last channel of the commissioning menu has been adjusted and confirmed, the controller asks for confirmation of the adjustments.

➔ To confirm the adjustments made in the commissioning menu, press button 3

Now the controller is ready for operation with typical settings to suit the selected system layout.

The settings made in the commissioning menu can be changed later on in the corresponding adjustment channels. Additional functions and options can of course be individually adjusted as well (see chap. 4.2).

4. Channel overview

4.1 Display channels

Note:
The displayed values and adjustment channels depend on which system layout, which options and functions have been selected. Only values and adjustment channels available for the individual settings selected will appear in the menu.

Indication of drainback time periods

Initialization

INIT:
ODB initialization active

INIT
60

Indicates the time adjusted in **tDTO**, running backwards.

Filling time

FLL:
ODB filling time active

FLL
05:00

Indicates the time adjusted in **tFLL**, running backwards.

Stabilization

STAB:
Stabilization

STAB
02:00

Indicates the time adjusted in **tSTB**, running backwards.

Indication of collector temperatures

COL, COL1, COL2:
Collector temperature
Display range: -40 ... +500 °F
[-40 ... +260 °C]

COL
185.0

Indicates the current collector temperature.

- COL : collector temperature (1-collector system)
- COL1 : collector temperature 1
- COL2 : collector temperature 2

Indication of tank temperatures

TST, TSTB, TSTT,
TST1, TST2, TDIS:
Tank temperatures
Display range: -40 ... +500 °F
[-40 ... +260 °C]

TST
140.0

Indicates the current tank temperature.

- TST : tank temperature (1-tank system)
- TSTB : tank temperature bottom
- TSTT : tank temperature top
  (Arr = 3 and 4 only)
- TST1 : temperature tank 1 (2-tank-systems)
- TST2 : temperature tank 2 (2-tank-systems)
- TDIS : thermal disinfection temperature
  (Arr = 3 only; replaces TSTT if, during thermal disinfection, the heating period DDIS is active)

Indication of sensors 3 and 4

S3, S4:
Sensor temperatures
Display range: -40 ... +500 °F
[-40 ... +260 °C]

S3
87.5

Indicates the current temperature of the corresponding additional sensor (without control function).

- S3 : temperature sensor 3
- S4 : temperature sensor 4

Note:
S3 and S4 will only be indicated if the temperature sensors are connected.

Indication of other temperatures

TSFB, TRET, TR:
Other measured temperatures
Display range: -40 ... +500 °F
[-40 ... +260 °C]

TSFB
134.6

Indicates the current temperature of the corresponding sensor.

- TSFB : temperature solid fuel boiler
- TRET : temperature heating return preheating
- TR : temperature return

Indication of current pump speed

n %, n1 %, n2 %:
Current pump speed
Display range: 30 ... 100 %

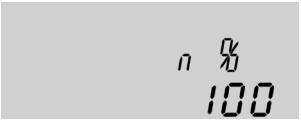

Indicates the current pump speed of the corresponding pump.

- n % : current pump speed (1-pump system)
- n1 % : current pump speed pump 1
- n2 % : current pump speed pump 2

kWh/MWh: Heat quantity in kWh / MWh
Display channel

Indicates the energy gained in heat quantity – only available if energy metering (OHQM) is activated.
The flow rate as well as the reference sensors S1 (flow) and S4 (return) are used for calculating the heat quantity supplied. It is shown in kWh in the channel **kWh** and in MWh in the channel **MWh**. The overall heat quantity results from the sum of both values.
The accumulated heat quantity can be reset. As soon as one of the display channels of the heat quantity is selected, the **SET** symbol is permanently shown on the display.

➔ Press button SET (3) for about two seconds in order to access the RESET mode of the counter.

The display symbol **SET** will flash and the heat quantity value will be set to 0.

➔ In order to finish this process, press the **SET** button to confirm.

In order to interrupt the RESET process, no button should be pressed for about five seconds. The controller automatically returns to the display mode.

CDIS
Countdown of monitoring period
Display range:
0 ... 30:0 ... 24 (dd:hh)

If the thermal disinfection option (**OTD**) is activated and the monitoring period is in progress, the remaining monitoring time will be displayed as **CDIS** (in days and hours) and counted backwards.

SDIS
Starting time display
Display range:
00:00 ... 24:00 (hh:mm)

If the thermal disinfection option (**OTD**) is activated and a starting delay time has been adjusted, the adjusted delay time is displayed (flashing) in this channel.

DDIS
Heating period display
Display range:
00:00 ... 24:00 (hh:mm)

If the thermal disinfection option (**OTD**) is activated and the heating period is in progress, the remaining time of the heating period is displayed (in hours and minutes) in this channel, counting backwards.

Time

Indicates the actual time.
Press the **SET** button for two seconds in order to adjust the hours. Press it again in order to adjust the minutes. Set the time by pressing buttons 1 and 2. Press the **SET** button in order to save the adjustment.

Operating hours counter

h P / h P1 / h P2:
Operating hours counter
Display channel

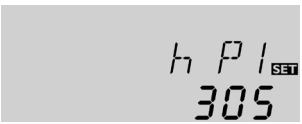

The operating hours counter accumulates the solar operating hours of the respective relay (**h P / h P1 / h P2**). Full hours are displayed.
The accumulated operating hours can be set back to zero. As soon as one operating hours channel is selected, the symbol **SET** is displayed.

➔ In order to access the RESET-mode of the counter, press the SET button (3) for approx. two seconds.

The display symbol **SET** will flash and the operating hours will be set to 0.

➔ Confirm the reset with the **SET** button in order to finish the reset.

In order to interrupt the RESET-process, do not press a button for about five seconds. The display returns to the display mode.

4.2 Adjustment channels

System layout selection

Arr:
System layout selection.
Adjustment range: 1 ... 10
Factory setting: 1

In this channel, a pre-defined system layout can be selected. Each system layout has a set of pre-programmed settings that can be individually changed.
If the system layout selection is changed later on, all adjustments made in the other channels will be lost. Therefore, changing the system layout is always followed by a security enquiry.

Security enquiry:

Only confirm the security enquiry if you are sure that you wish to change the system layout selection!

➔ To confirm the security enquiry, press button 3

ΔT-regulation

DT O / DT1O / DT2O / DT3O:
Switch-on temperature diff.
Adjustment range: 2.0 ... 40.0°Ra
[1.0 ... 20.0 K]
in steps of 1 °Ra [0.5 K]
Factory setting: 12.0°Ra
[6.0 K]

The controller works as a standard differential controller. If the switch-on difference is reached, the pump is activated. When the temperature difference falls below the adjusted switch-off temperature difference, the respective relay switches off.

Note:
The switch-on temperature difference must be at least 1 °Ra [0.5 K] higher than the switch-off temperature difference.

DT F / DT1F / DT2F / DT3F:
Switch-off temperature diff.
Adjustment range: 1.0 ... 39.0°Ra
[0.5 ... 19.5 K]
in steps of 1 °Ra [0.5 K]
Factory setting: 8.0°Ra
[4.0 K]

Note:
When the drainback option **ODB** is activated, the temperature differences **DT O**, **DT F** and **DT S** are set to a fixed adjustment:

DT O	=	20 °Ra	[10 K]
DT F	=	8 °Ra	[4 K]
DT S	=	30 °Ra	[15 K]

Previous adjustments made in these channels will be overridden and may have to be entered again if **ODB** is deactivated later on.

Pump speed control

DT S / DT1S / DT2S / DT3S:
Nominal temperature difference
Adjustment range: 3.0 ... 60.0 °Ra
[1.5 ... 30.0 K]
in steps of 1 °Ra [0.5 K]
Factory setting: 20.0 °Ra
[10.0 K]

Note:
For pump speed control, the operation mode of the corresponding relay must be set to Auto (adjustment channel **MAN1** / **MAN2**)

RIS / RIS1 / RIS2 / RIS3:
Rise
Adjustment range:
2 ... 40 °Ra [1 ... 20 K]
in steps of 2 °Ra [1 K]
Factory setting: 4 °Ra [2 K]

When the switch-on temperature difference is reached, the pump is activated at full speed for 10 seconds. Then, the speed is reduced to the minimum pump speed value (factory setting = 30 %).
If the temperature difference reaches the adjusted nominal temperature difference, the pump speed increases by one step (10 %). If the difference increases by the adjustable rise value, the pump speed increases by 10 % respectively until the maximum pump speed of 100 % is reached. The response of the controller can be adapted via the parameter “Rise”.

Note:
The nominal temperature difference must be at least 1 °Ra [0.5 K] higher than the switch-on temperature difference.

Minimum pump speed

nMN, n1MN, n2MN:
Pump speed control
Adjustment range: 30 ... 100
in steps of 5 %
Factory setting: 30

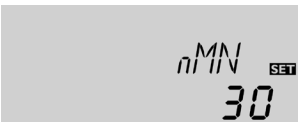

A relative minimum pump speed can be allocated to the outputs R1 and R2 via the adjustment channels **nMN, n1MN** and **n2MN.**

Note:
When loads which are not speed-controlled (e.g. valves) are used, the value must be set to 100 % in order to deactivate pump speed control.

Maximum tank temperature

S MX / S1MX / S2MX:
Maximum tank temp.
Adjustment range:
40 ... 200 °F [4 ... 95 °C]
Arr 10:
40 ... 190 °F [4 ... 90 °C]
in steps of 2 °Ra [1 K]
Factory setting:140 °F [60 °C]

Once the adjusted maximum temperature is exceeded, the solar pump is switched off and further loading of the tank is prevented to reduce scald risk or system damage. A fixed hysteresis of 4 °Ra [2 K] is set for the maximum tank temperature.
When the temperature at the corresponding sensor exceeds the adjusted maximum tank temperature, the ☀ symbol is shown on the display.

Note:
If the collector cooling or the system cooling function is activated, the adjusted tank temperature may be overridden. In order to prevent system damage, the controller is also equipped with a non-adjustable emergency shutdown if the tank reaches 200 °F [95 °C].

Collector temperature limitation
Emergency shutdown of the collector

EM / EM1 / EM2:
Collector temperature limitation
Adjustment range:
170...390 °F
[80 ... 200 °C]
in steps of 2 °Ra [1 K]
Factory setting:
270 °F [130 °C]

If the adjusted collector emergency shutdown temperature (**EM / EM1 / EM2**) is exceeded, the controller switches off the solar pump (R1 / R2) in order to protect the system against overheating (collector emergency shutdown). A hysteresis of 20 °Ra [10 K] is set for the collector temperature limitation. While the collector is in emergency shutdown, ⚠ (flashing) is shown on the display.

Note:
If the drainback option **ODB** is activated, the adjustment range of **EM** is changed to 170 ... 250 °F [80 ... 120°C]. The factory setting in that case is 200 °F [95 °C].

WARNING!	**Danger of injury and system damage through pressure surges!** If water is used as a heat transfer medium in a pressure-less system, the water will start boiling at 212 °F [100 °C]. ➔ **If a pressure-less drainback system is used with water as a heat transfer medium, do not adjust the collector temperature limitation EM to more than 200 °F [95 °C]!**

Cooling functions

In the following the three cooling functions – collector cooling, system cooling and tank cooling – are described in detail. The following notes are valid for all three cooling functions:

Note:
The cooling functions will not become active as long as solar loading is possible.

Note:
In 2-tank-systems, the cooling functions will only affect tank 1, respectively the bottom area of the tank (such as in Arr = 4).

Collector cooling function

OCC / **OCC1** / **OCC2**:
Option collector cooling
Adjustment range: OFF/ON
Factory setting: OFF

CMX / **CMX1** / **CMX2:**
Maximum collector temp.
Adjustment range:
150…320 °F
[70 ... 160 °C]
in steps of 1 °Ra [1 K]
Factory setting:
230 °F [110 °C]

When the collector cooling function is activated, the controller aims to keep the collector at an operational temperature.
When the adjusted maximum tank temperature is reached, solar loading stops. If the collector temperature increases to the adjusted maximum collector temperature, the solar pump is activated until the collector temperature falls at least 10 °Ra [5 K] below the maximum collector temperature. The tank temperature may increase (subordinate active maximum tank temperature), but only up to 200°F [95 °C] (emergency shutdown of the tank).
If the collector cooling function is active, ⓘ and ☀ (flashing) is shown on the display.

Note:
This function will only be available if the system cooling function (**OSYC**) is deactivated.

Note:
In system layout 10, the parameter **CMX** is available without the **OCC** function. In system layout 10, **CMX** is used to set the activation temperature for the heat dump function. No other switch-on condition is needed in that case.

System cooling function

OSYC:
Option system cooling
Adjustment range: OFF/ON
Factory setting: OFF

DTCO:
Switch-on temperature diff.
Adjustment range:
2.0 ... 60.0 °Ra
[1.0 ... 30.0 K]
in steps of 1 °Ra [0.5 K]
Factory setting:
40.0°Ra [20.0 K]

DTCF:
Switch-off temperature diff.
Adjustment range:
1.0 ... 59.0 °Ra
[0.5 ... 29.5 K]
in steps of 1 °Ra [0.5 K]
Factory setting:
30.0 °Ra [15.0 K]

When the system cooling function is activated, the controller aims to keep the solar system operational for a longer time. The function overrides the maximum tank temperature to provide thermal relief of the collector field and the heat transfer fluid on hot days.
If the tank temperature is higher than the maximum tank temperature (**S MX / S1MX**) and the switch-on temperature difference **DTCO** is reached, the solar system remains activated. Solar loading is continued until either the tank temperature reaches 200 °F [95 °C] (emergency shutdown of the tank), the temperature difference falls below the adjusted value **DTCF** or the collector emergency shutdown temperature **EM** is reached.
If the system cooling function is active, ⓘ and ☀ (flashing) is shown on the display.

Note:
This function will only be available if the collector cooling function (**OCC**) is deactivated.

Tank cooling function

OSTC:
Tank cooling option
Adjustment range: OFF / ON
Factory setting: OFF

OHOL:
Holiday cooling option
Adjustment range: OFF / ON
Factory setting: OFF

THOL:
Holiday cooling temperature
Adjustment range:
70 ... 175 °F
[20 ... 80 °C]
in steps of 1 °F [1 °C]
Factory setting:
110 °F [40 °C]

When the tank cooling function is activated, the controller aims to cool down the tank during the night in order to prepare it for solar loading on the following day.

If the adjusted maximum tank temperature (**S MX / S1MX**) is exceeded and the collector temperature falls below the tank temperature, the system will be reactivated in order to cool down the tank. Cooling will continue until the tank temperature has fallen below the adjusted maximum tank temperature (**S MX / S1MX**) again. A fixed hysteresis of 4 °Ra [2 K] is set for this function.
Reference threshold temperature differences for the tank cooling function are **DT O** and **DT F**.

If no DHW consumption is expected for a longer period of time, the additional holiday cooling option **OHOL** can be activated in order to extend the tank cooling function. The adjustable temperature **THOL** then replaces the maximum tank temperature (**S MX / S1MX**) as a switch-off temperature for the tank cooling function.
When the holiday cooling function is activated, ☀ and ⚠ (flashing) are shown on the display.
While the holiday cooling function is active, ⏻, ☀ and ⚠ (flashing) are shown on the display.

Collector minimum limitation option

OCN / OCN1 / OCN2:
Collector minimum limitation
Adjustment range: OFF / ON
Factory setting: OFF

CMN / CMN1 / CMN2:
Collector minimum temp.
Adjustment range:
50...190 °F
[10 ... 90 °C]
in steps of 1 °Ra [0.5 K]
Factory setting:
50 °F [10 °C]

If the collector minimum limitation option is activated, the pump (R1 / R2) is only switched on if the adjustable collector minimum temperature is exceeded. The minimum temperature prevents the pump from being switched on too often at low collector temperatures. A fixed hysteresis of 10 °Ra [5 °K] is set for this function
If the collector minimum limitation is active, ❄ (flashing) is shown on the display.

Note:
If **OSTC** or **OCF** is active, the collector minimum function will be overridden. In that case, the collector temperature may fall below **CMN**.

Antifreeze option

OCF / OCF1 / OCF2:
Antifreeze function
Adjustment range: OFF / ON
Factory setting: OFF

CFR / CFR1 / CFR2:
Antifreeze temperature
Adjustment range:
-40.0 ... +50.0 °F
[-40.0 ... +10.0 °C]
in steps of 1 °Ra [0.5 K]
Factory setting:
40.0 °F [4.0 °C]

The antifreeze function activates the loading circuit between the collector and the tank when the temperature falls below the adjusted antifreeze temperature. This will protect the fluid against freezing or coagulating. If the adjusted antifreeze temperature is exceeded by 2 °Ra [1 K], the loading circuit will be deactivated.
When the antifreeze function is activated, ❄ is shown on the display. If the antifreeze function is active, ⏻ and ❄ (flashing) are shown on the display.

Note:
Since this function uses the limited heat quantity of the tank, the antifreeze function should be used in regions with few days of temperatures around the freezing point.
The antifreeze function will be suppressed if the tank temperature falls below 40 °F [5 °C] in order to protect the tank from frost damage.

The SOM 7 plus priority logic

Note:
Priority logic can be used in multi-tank system layouts only (Arr = 4, 5, 6).

PRIO:
Loading priority
Adjustment range:
SE 1, SE 2, Su 1, Su 2, 0, 1, 2
Factory setting:
Arr 4: 2
Arr 5, 6: 1

Note:
If the priority is set to **Su 1** or **Su 2**, solar loading of the subordinate tank will be aborted at once if the temperature in the priority tank (tank 1 for Su 1, tank 2 for Su 2) falls below the adjusted maximum temperature. If, in that case, the temperature difference between the priority tank and the collector is not sufficiently high, solar loading will be stopped completely.

Spreaded loading temperature difference
(only available if PRIO is set to SE 1 or SE 2)

DTSE:
Spread temperature difference
Adjustment range:
40 ... 160 °Ra
[20 ... 90 K]
in steps of 1 °Ra [1 K]
Factory setting: 70 °Ra [40 K]

If a multi-tank system layout has been chosen, the priority logic determines how the heat is divided between the tanks. Different types of priority logic are adjustable:

- spreaded loading (SE 1 and SE 2)
- successive loading (Su 1 and Su 2)
- parallel loading (0)
- tank sequence control (1 and 2)

If **priority SE 1** or **SE 2** (only available in Arr 6) is adjusted, the subordinate tank will be loaded in parallel if the temperature difference between the collector and the priority tank (tank 1 for SE 1, tank 2 for SE 2) exceeds the adjusted value **DTSE** and the subordinate tank has not reached its maximum temperature.
Parallel loading will stop as soon as the temperature difference between the collector and the priority tank falls 4 °Ra [2 K] below **DTSE** or the subordinate tank reaches its maximum temperature.
If **priority Su 1** or **Su 2** is adjusted, the tanks are loaded successively. The subordinate tank will only be loaded if the priority tank (tank 1 for Su 1, tank 2 for Su 2) has reached its adjusted maximum temperature (**S1MX** or **S2MX**).
If **priority 0** is adjusted and the switch-on conditions are fulfilled for both tanks, the tanks are loaded in parallel (Arr 6), resp. in an oscillating loading (Arr 4, 5) beginning with the tank with the lowest temperature. In an oscillating loading, solar loading will switch from one tank to the other in steps of 10 °Ra [5 K] temperature difference between the tanks.
If **priority 1 / 2** is adjusted, tank sequence control will be activated (see below) with the corresponding tank as priority tank.

Tank sequence control
(only available if priority is set to SE 1, SE 2, 1 or 2)

tLB:
Loading break time
Adjustment range: 1 ... 30 min
Factory setting: 2 min

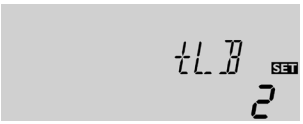

tRUN:
Loading runtime
Adjustment range: 1 ... 30 min
Factory setting: 15 min

Tank sequence control will be activated when **PRIO** is set to SE 1, SE 2, 1 or 2.
If the priority tank cannot be loaded, the subordinate tank is checked. If useful heat can be added, it will be loaded for the "loading runtime time" (**tRUN** - factory setting 15 min.) After this, the loading process stops and the controller monitors the increase in collector temperature during the loading break time **tLB**. If it increases by 4° Ra [2 K], the break time timer starts again to allow the collector to gain more heat. If the collector temperature does not increase sufficiently, the subordinate tank will be loaded again for the **tRUN** time as before.

As soon as the switch-on condition of the priority tank is fulfilled, it will be loaded. If the switch-on condition of the priority tank is not fulfilled, loading of the second tank will be continued. If the priority tank reaches its maximum temperature, sequence controlled loading will not be carried out.

If tank sequence control is active and the system switches to load the priority tank, the parameter **tLB** also acts as a stabilization timer, during which the switch-off condition **DT F** is ignored while the system operation stabilizes.

Evacuated tube collector function

0 TC:
Evacuated tube collector function
Adjustment range: OFF / ON
Factory setting: OFF

This function helps overcome the disadvantages caused by the non-ideal sensor position with some tube collectors.

This function operates within an adjusted time frame (beginning at **TCST** and ending at **TCEN**). It activates the collector circuit pump for an adjustable runtime (**TCRU**) between adjustable standstill intervals (**TCIN**) in order to compensate for the delayed temperature measurement.

If the runtime **TCRU** is set to more than ten seconds, the pump will be run at 100 % for the first ten seconds of the runtime. For the remaining runtime, the pump will be run at the adjusted minimum speed **nMN**.

If the collector sensor is defective or the collector is blocked, this function is suppressed or switched off.

In system layout 7 (Arr = 7) both collectors are operated independently from each other by means of this function. If the tank is being loaded by one collector, the other one is nevertheless operated after the adjusted standstill time.

TCST:
Tube collector function starting time
Adjustment range:
00:00 ... 23:45
in steps of 00:15
Factory setting: 07:00

TCEN:
Tube collector function ending time
Adjustment range:
00:00 ... 23:45
in steps of 00:15
Factory setting: 19:00

TCRU:
Tube collector function runtime
Adjustment range: 5 ... 500 s
in steps of 5 s
Factory setting: 30 s

TCIN:
Tube collector function standstill interval
Adjustment range: 1 ... 60 min
in steps of 1 min
Factory setting: 30 min

Note:
If the drainback option **ODB** is activated, **TCRU** will not be available. In that case, the runtime is determined by the parameters **tFLL** and **tSTB**.

WARNING!	**Danger of injury and system damage through pressure surges!**
	If a drainback system is filled due to the tube collector function and the heat transfer medium enters very hot collectors, pressure surges can occur. ➔ **If a pressure-less drainback system is used, TCST and TCEN must be adjusted such that the system will not be filled during times of potentially strong irradiation!**

Energy metering

OHQM: Energy metering
Adjustment range: OFF / ON
Factory setting: OFF

If OHQM is activated, the heat quantity gained can be calculated and displayed. Energy metering is possible on Arr. 1, 3, 4, 5 and 10 if a flowmeter is used. To enable energy metering, proceed as follows:

➔ Read the flow rate (l/min) from the flowmeter at maximum pump speed and adjust it in the **FMAX** channel

➔ Adjust the heat transfer fluid and the concentration of the antifreeze in the channels **MEDT** and **MED%**.

FMAX: Flow rate in l/min
Adjustment range: 0.5 ... 100.0
in steps of 0.5
Factory setting: 6.0

MEDT: Heat transfer fluid
Adjustment range: 0 ... 3
Factory setting: 1

Heat transfer fluid:
0 : Water
1 : Propylene glycol
2 : Ethylene glycol
3 : Tyfocor® H -30 L/LS

MED%: Antifreeze ratio in Vol-% (MED% is hidden when MEDT 0 or 3 is used.)
Adjustment range: 20 ... 70
in steps of 1 %
Factory setting: 45

Note:
If the system layout 10 has been selected and **OHQM** is activated, energy metering will be interrupted when the 3-way-valve switches to the heat dump.

Drainback option

Note:
A drainback system layout requires additional components such as a holding tank. The drainback option should only be activated if all components required are properly installed.

Note:
The drainback option is only available in system layouts with one tank and one collector (Arr 1, 2, 3, 8 and 9).

ODB:
Drainback option
Adjustment range: OFF / ON
Factory setting: OFF

A drainback system permits the heat transfer fluid to drain back into the holding tank when solar energy is not collected. The drainback option will initiate the filling of the system when solar loading begins.

If the drainback option **ODB** is activated, the pump will operate at 100 % speed for the adjusted filling time **tFLL** in order to fill the system with fluid from the holding tank. After **tFLL**, pump speed will go down to the adjusted minimum pump speed **nMn**. The switch-off conditions will then be ignored for the stabilization time **tSTB** in order to avoid the system from shutting down prematurely.

If the function is activated, the menu items described in the following (**tDTO**, **tFLL** and **tSTB**) have to be adjusted:

Note:
When the drainback option **ODB** is activated, the cooling functions **OCC**, **OSYC** and **OSTC** as well as the antifreeze function **OCF** are not available.
If **OCC**, **OSYC**, **OSTC** or **OCF** have already been activated before, they will be deactivated again as soon as **ODB** is activated. They will remain deactivated, even if **ODB** is deactivated later on.

Note:
When the drainback option **ODB** is activated, the temperature differences **DT O**, **DT F** and **DT S** are set to a fixed adjustment. Additionally, the adjustment range and the factory setting of the collector emergency shutdown temperature **EM** changes (see the corresponding channel descriptions for further information).
Previous adjustments made in these channels will be overridden and have to be entered again if **ODB** is deactivated later on.

Time period - switch-on conditions

tDTO:
Time period -
switch-on conditions
Adjustment range: 1 ... 100 s
in steps of 1 s
Factory setting: 60 s

The parameter **tDTO** is used for adjusting the time period during which the switch-on condition **DT O** must be permanentely fulfilled.

Filling time

tFLL:
Filling time
Adjustment range:
1.0 ... 30.0 min
in steps of 0.5 min
Factory setting: 5.0 min

The filling time can be adjusted using the parameter **tFLL**. During this period, the pump runs at 100 % speed.

Stabilization

tSTB:
Stabilization
Adjustment range:
1.0 ... 15.0 min
in steps of 0.5 min
Factory setting: 2.0 min

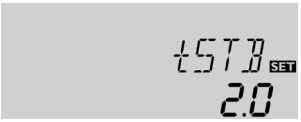

The parameter **tSTB** is used for adjusting the time period during which the switch-off condition **DT F** will be ignored after the filling time has ended.

Booster function option

OBST:
Booster function
Adjustment range: ON / OFF
Factory setting: OFF

This function is used for switching on a second pump when filling the solar system. When solar loading starts, R2 is energized in parallel to R1. After the filling time (**tFLL**) has ended, R2 is switched off.

Note:
The booster function is available in system layout 1 (Arr = 1) only.
The booster function will only be available if the drainback option has been activated.

Operating mode

MAN1 / MAN2:
Operating mode Adjustment
range: OFF, Auto, ON
Factory setting: Auto

MAN SET
Auto

For control and service work, the operating mode of the controller can be manually adjusted. For this purpose, select the adjustment value **MAN1, MAN2** in which the following adjustments can be made:

- **MAN1 / MAN2**
  Operating mode
  OFF : relay off ⚠ (flashing) + ✋
  Auto : relay in automatic operation
  ON : relay on ⚠ (flashing) + ✋

Note:
Always adjust the operating mode back to "Auto" when the control and service work is completed. Normal operation is not possible in manual mode.

Language

LANG:
Language selection
Selection: dE, En
Factory setting: En

LANG SET
En

The menu language can be adjusted in this channel.

- dE : German
- En : English

Unit

UNIT:
Temperature unit selection
Selection: °F, °C
Factory setting: °C

UNIT SET
°C

In this adjustment channel, the display unit for temperatures and temperature differences can be chosen. The unit can be switched between °C / K and °F / °Ra during operation. Temperatures and temperature differences in °F and °Ra are displayed without units. If the indication is set to °C, the units are displayed with the values.

Reset

RESE
Reset function

RESE SET

By using the reset function, all adjustments will be set back to the factory settings.

➔ To initiate a reset, press button 3

Any previous adjustments will be lost. Therefore, initiating the reset function is always followed by a security enquiry.

Only confirm the security enquiry if you are sure that you wish to reset all adjustments to the factory settings!

Security enquiry:

SAVE SET
YES

➔ To confirm the security enquiry, press button 3

Note:
Whenever a reset has been completed, the controller runs the commissioning menu again (see chap. 3).

5. Troubleshooting

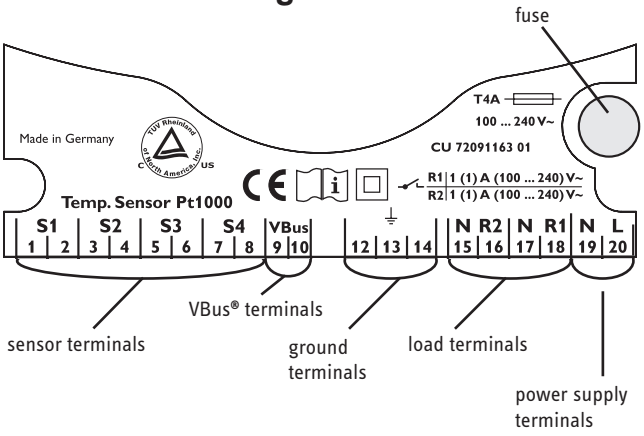

In the case of an error, a message is shown on the display of the controller:

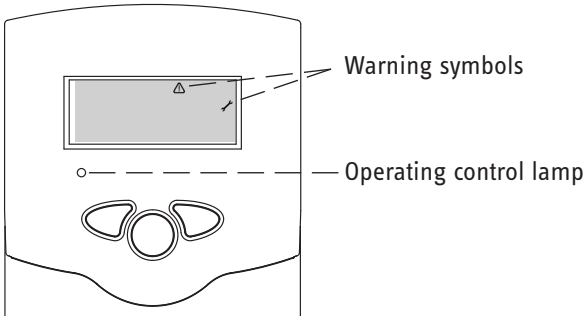

Operating control lamp flashes red. On the display the symbols ⚒ and ⚠ appear.

Sensor defect. An error code instead of a temperature is displayed in the sensor display channel.

888.8

Cable broken. Check cable.

- 88.8

Short circuit. Check cable.

Disconnected Pt1000 temperature sensors can be checked with an ohmmeter. In the following table, the resistance values with the corresponding temperatures are shown.

°C	°F	Ω	°C	°F	Ω
-10	14	961	55	131	1213
-5	23	980	60	140	1232
0	32	1000	65	149	1252
5	41	1019	70	158	1271
10	50	1039	75	167	1290
15	59	1058	80	176	1309
20	68	1078	85	185	1328
25	77	1097	90	194	1347
30	86	1117	95	203	1366
35	95	1136	100	212	1385
40	104	1155	105	221	1404
45	113	1175	110	230	1423
50	122	1194	115	239	1442

Resistance values of the Pt1000-sensors

Operating control lamp off.

Check the power supply. Is it disconnected?

no

The fuse of the controller could be blown. It can be replaced after the front cover has been removed (spare fuse is enclosed in the accessory bag).

yes

Check the supply line and reconnect it.

5.1 Various:

Pump is overheated, but no heat transfer from the collector to the tank, flow and return have the same temperature; perhaps also air / gas bubbles in the lines.

- Air in the system?
  - no → Is the collector circuit blocked at the dirt trap?
  - yes → Air in the system; increase the system pressure to at least static primary pressure plus 7. 25 psi (0.5 bar); if necessary continue to increase pressure; switch the pump off and on for a short time.
- Is the collector circuit blocked at the dirt trap?
  - yes → Clean the dirt trap

Pump starts for a short moment, switches off, switches on again, etc.

- Temperature difference at the controller too small?
  - no → Wrong position of collector sensors?
  - yes → Change ΔTon and ΔToff correspondingly. Problem solved?
    - no → Wrong position of collector sensors?
    - yes → o.k.
- Wrong position of collector sensors?
  - no → Plausibility control of the option tube collector special function
  - yes → Mount the collector sensor at solar flow (warmest collector output); use sensor well of the respective collector.

Pump starts up very late

- Switch-on temperature difference ΔTon to large?
  - no → Non-ideal position of the collector sensor (e.g. flatscrew sensor instead of sensor in sensor wells)?
  - yes → Change ΔTon and ΔToff correspondingly.
- Non-ideal position of the collector sensor (e.g. flatscrew sensor instead of sensor in sensor wells)?
  - yes → Activate tube collector function if necessary.
- Activate tube collector function if necessary.
  - o.k.

The temperature difference between tank and collector increases enormously during operation; the collector circuit cannot dissipate the heat.

- Collector circuit pump defective?
  - no → Heat exchanger calcified?
  - yes → Check / replace it
- Heat exchanger calcified?
  - no → Heat exchanger blocked?
  - yes → Decalcify it
- Heat exchanger blocked?
  - no → Heat exchanger too small?
  - yes → Clean it
- Heat exchanger too small?
  - yes → Replace with correctly sized one.

Tanks cool down at night

- Collector circuit pump runs during the night?
  - yes → Check controller: Manual operation active? Tube collector function active? Tank cooling or antifreeze function active?
  - no ↓
- Collector temperature is at night higher than the outdoor temperature
  - yes → Check the check valve in the flow and the return pipe with regard to the functional efficiency.
  - no ↓
- Sufficient tank insulation?
  - no → Increase insulation.
  - yes ↓
- Insulation close enough to the tank?
  - no → Replace insulation or increase it.
  - yes ↓
- Are the tank connections insulated?
  - no → Insulate the connections.
  - yes ↓
- Warm water outflow upwards?
  - yes → Change connection and let the water flow horizontally or through a siphon (downwards); less tank losses now ?
    - yes → o.k.
    - no ↓
  - no ↓
- Does the warm water circulation run for a very long time?
  - yes → Use the circulation pump with timer and switch-off thermostat (energy efficient circulation).
  - no ↓
- Circulation pump and blocking valve should be switched off for one night; less tank losses?
  - yes → a
  - no → Check whether the pumps of the backup heating circuit run at night; check whether the non-return valve is defective; problem solved ?
    - yes → o.k.
    - no → b

a

- Control the non-return valve in warm water circulation - o.k.
  - yes → The thermosiphoning in the circulation line is too strong; insert a stronger valve in the non-return valve or an electrical 2-port valve behind the circulation pump; the 2-port valve is open when the pump is activated, otherwise it is closed; connect pump and 2-port valve electrically in parallel; activate the circulation again
  - no → Clean or replace it

b

- Further pumps which are connected to the solar tank must also be checked.

The solar circuit pump does not work, although the collector is considerably warmer than the tank.

- Is the control lamp (LED) illuminated?
  - no → There is no current; check fuses / replace them and check power supply.
  - yes ↓
- Does the pump start up in manual operation?
  - yes → The adjusted temperature difference for starting the pump is to high; choose a value which makes more sense.
  - no ↓
- Is the pump current enabled by the controller?
  - yes → Is the pump stuck?
    - yes → Turn the pump shaft using a screwdriver; now passable?
      - no → Pump is defective - replace it
  - no ↓
- Are the controller fuses o.k. ?
  - yes → Controller might be defective - replace it or contact the distributor.
  - no → Replace fuses.

Warranty

Make any warranty claim in the country where you purchased the appliance. In such cases, please contact our representation or the importer.

Our warranty applies only if:

- These installation instructions have been observed
- Exclusively accessories designated for this appliance have been used
- All required steps up to and including commissioning have be carried out by a qualified contractor
- Maintenance as specified has been carried out
- Exclusively our spare parts have been used for repairs

Environment and recycling

Please help us protect the environment. Dispose of the appliance and its packaging in accordance with national regulations.

STIEBEL ELTRON Inc.
17 West Street | West Hatfield MA 01088
Tel. 4 13-247-3380 | Fax 413-247-3369
Email info@stiebel-eltron-usa.com
www.stiebel-eltron-usa.com

STIEBEL ELTRON

A 291477-35631-8540

4 017212 914779